EBF-850-BAT-TEE-CP-0.5GPM-MLM-IR-BT-FCT

CODE NUMBER

3315365BT

DESCRIPTION

Battery Power Supply, Back-Check Tee, Polished Chrome Finish, 0.5 gpm, Multi-Laminar Spray, Infrared Sensor, Smart Faucet, Optima® Battery-Powered Wall-Mounted Wall Body Faucet.



DETAILS

- Flow Rate: 0.5 gpm (2 Lpm) (0.5GPM)
- Spray Type: Multi-Laminar (MLM)
- Sensor Type: Infrared (IR)
- Mounting Type: Single Hole
- Power Supply: Battery (BAT)
- Temperature Mixer: Back-Check Tee (TEE)
- Finish: Polished Chrome (CP)
- Factory Default Timeout: 30s
- Factory Default GPC: 0.25

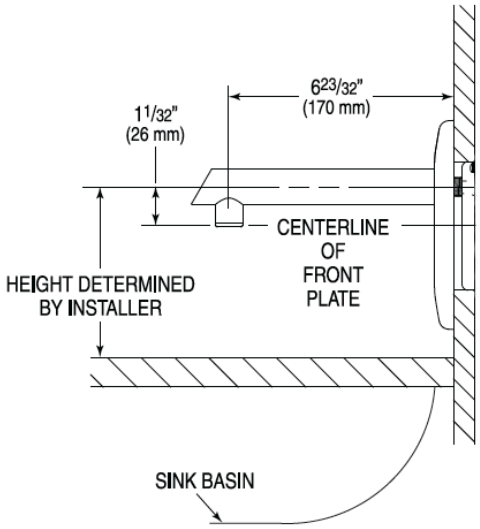

FEATURES

Commercial Grade Faucet, ADA Compliant, Cast Brass Spout, Quick Connect Fittings, Integrated Water Shut-off, Wireless Settings Adjustment, On-demand or Metered activation, Hygienic Line Flush, Water Usage and Battery Strength Reporting, Self-adapting Sensor

ELECTRICAL SPECIFICATIONS

- Battery Life: 3 years 8,000 cycles/month
  - Optional power harvesting significantly extends service life
- Timeout Adjustment Settings: 30s

VIDEOS

- Optima Faucet App
- Sloan Optima Below Deck Faucet

DOWNLOADS

- Optima Smart Faucet Below Deck Installation Instructions
- ETF-800/EBF-850 Below Deck Repair and Maintenance Guide
- Additional Downloads

COMPLIANCES & CERTIFICATIONS

(ADA Compliant, ASME A112.18.1 Compliant, CEC Compliant, cUPC Certified, cUPC Low Lead Compliant, GPC 0.25 or less, NYC604.4, Proposition 65, TAS, UPC Certified, UPC Low Lead Compliant)

RECOMMENDED SPECIFICATION

Faucet shall include cast brass body, quick-connect fittings, twist-off/shut-off solenoid assembly, removable battery cartridge, flexible power supply and allow adjustment of settings wirelessly via Apple or Android smartphones.

NOTES

All information contained within this document subject to

Sloan 10500 Seymour Ave, Franklin Park, IL 60131
Phone: 800.982.5839 • Fax: 800.447.8329 • sloan.com

change without notice.

Looking for other variations of the EBF-850 product? View the general spec sheet with all options.

Find a matching soap dispenser for this faucet.
Find a compatible sink for this faucet.

WARRANTY

3 Year

ROUGH-IN

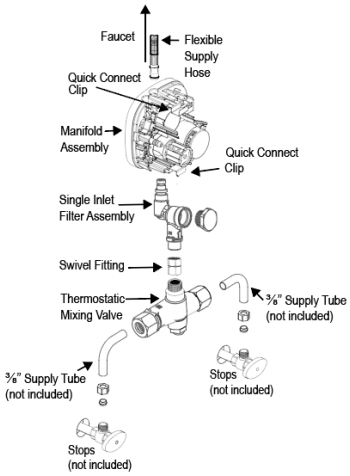

SINGLE INLET FILTER FITTING KIT WITH BELOW DECK THERMOSTATIC MIXING VALVE (BDT)

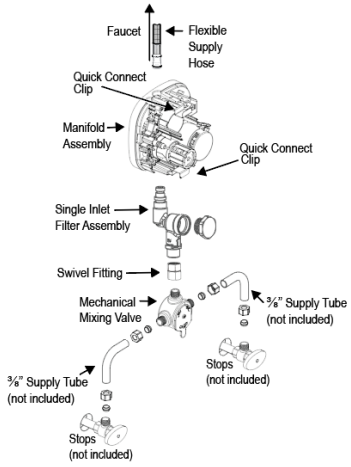

SINGLE INLET FILTER FITTING KIT WITH BELOW DECK MANUAL MIXING VALVE (BDM)

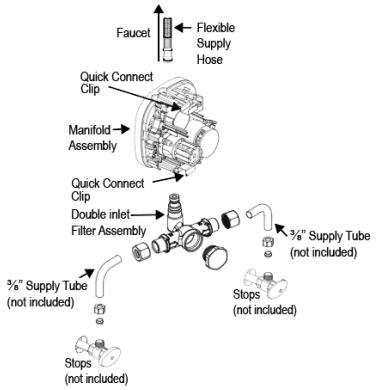

DOUBLE INLET FILTER FITTING

Sloan 10500 Seymour Ave, Franklin Park, IL 60131
Phone: 800.982.5839 • Fax: 800.447.8329 • sloan.com