BASYS® Low Faucets
EFX375.002.0000

▶ Code Number
3324045

▶ Flow Rate Options (Digit 6)
1.5 gpm/5.7 Lpm Aerated Stream

▶ Description
Sensor Metering Handwashing Faucet, solar powered with battery back-up, double-infrared sensor activated for pre-tempered or hot and cold water operation.

▶ Faucet Specifications
- One tool service
- All wetted components to be stainless steel, engineered thermoplastic, EPDM, and copper or copper alloy
- Solenoid housed in removable carrier that includes supply strainer, serviceable from above deck
- Mechanical mixing, integral to spout, optional
- Vandal resistant spray insert, key housed inside faucet body
- All electronics sealed to IP-67
- Gold plated electrical contacts
- Above deck individual diagnostic indicators for battery life, solenoid condition, and power up mode
- Flexible, high pressure supply hoses, 3/8" compression connections
- Bi-stable magnetic solenoid
- Double infrared sensors with automatic setting feature
- Single hole installation
- Includes all mounting hardware
- Selectable Sloan programmable line purge mode eliminates stagnant water
- 4" trim plate
- Operates from 1 to 125 psi
- Faucet can be configured to add solar or solar and LCD display
- Solar powered, sensor-activated, electronic, chrome plated die cast body, handwashing faucet with the following features:
- Four (4) "AA" alkaline batteries (act as back-up)

▶ Special Finish Options* (ordered separately, late 2013)
- Physical Vapor Desposition brushed stainless (Brushed Chrome)
- Physical Vapor Desposition Brushed Nickel
- Physical Vapor Desposition Polished Brass
- * Minimum order quantities and long lead times may apply. Please contact Customer Service for details.



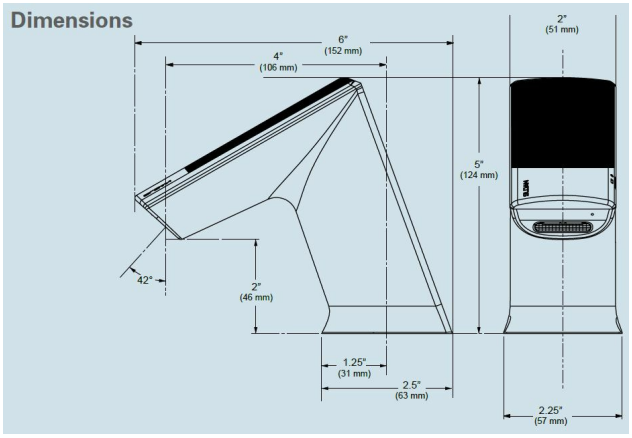

▶ BASYS Spec Language
Sloan BASYS model no. EFX-375.____._____ double infrared sensor-activated electronic handwashing faucet with battery back-up and line purge mode for pre-tempered or hot/cold water supplies. Product to have double infrared sensors with automatic setting feature. Solenoid valve housed in removable carrier that closes water supply upon removal eliminating need to access control stops. Solenoid carrier includes strainer for easy above-deck service. Optional thermostatic mixer complies with ASSE 1070 requirements.

▶ Legislative Compliance
Federal Reduction of Lead in Drinking Water Act Law 111-380 (contains no more than 0.25% weighted average lead content), Section 116875 of the California Health & Safety Code, and Vermont Lead Reduction Law (Vermont Act 193).

▶ Compliance & Certifications
UPC, IPC, NPC Canada, California Green Building Code (CALGreen), City of Los Angeles Water Efficiency Ordinance ASME A112.18.1/CSA B125.1, NSF 372, ANSI/UL 1951, ICC/ANSI 117.1

ASME A112.18.1/CSA B125.1, NSF 372, ANSI/UL 1951, ICC/ANSI 117.1

SLOAN 10500 SEYMOUR AVE. ● FRANKLIN PARK, ● IL. 60131
Ph: 1-800-9-VALVE-9 or 1-847-671-4300 ● Fax: 1-800-447-8329 or 1-847-671-4380 ● http://www.sloan.com

▶ Electrical Specifications

- Control Circuit – 6.75 VDC
- Sensor Range – Nominal: 4"- 5" (102-127 mm) Faucet Adaptive Self-Adjustment Range: 2"- 14" (51-356 mm) nominal
- Battery Life – 3-years under worst case conditions of 8,000 cycles per month and high water pressure without power harvesting. Power harvesting should extend service life of batteries.
- Power Supplies – 6 VDC Solar Energy Module with 6 VDC Alkaline Battery Pack

This space for Architect/Engineer Approval

▶ Base Plate Options (Digit 8)

- Base plate for 4" centerset sink
- Base plate for 8" centerset sink

▶ ROUGH-IN

EFX-375.10X.0X00 Faucet
with Hot & Cold Water Supply

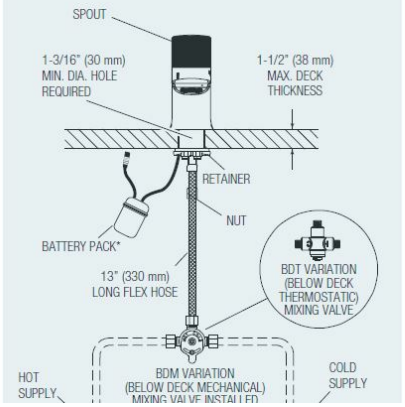

EFX-375.00X.0X0X Faucet
with Single Line Water Supply

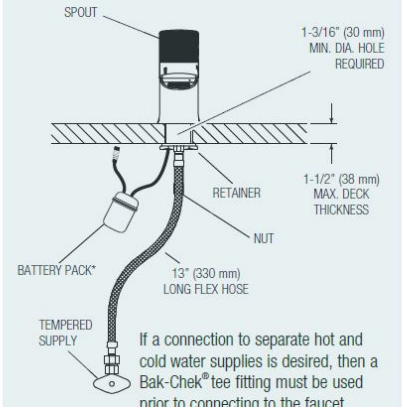

EFX-375.50X.0X00 Faucet
with Hot & Cold Water Supply

