# Faucet and Soap Dispenser Combination
# ESD-2101

## ▶ Code Number
3346099

## ▶ Description
The ESD-2101 is part of Sloan's new line of matching combination soap dispensers and faucets. They are easy to order kits for any bathroom. The soap dispenser uses a replaceable soap refill bottle with easy release collar for fast soap refill changes. The sensor technology offers a hands-free operation by delivering a pre-measured foam soap application "on demand". The faucet is Sloan's SF-2150-4. The ESD-2100 is also available for sale without faucet.

Contains:

- 1-SF2150-4 Chrome Faucet Battery Operated (3362102)
- 1-ESD-2100 Soap Dispenser (3346098)
- 1-ESD-321 2 pack of 1500ml foam soap (3346044)

## ▶ Faucet
- Flow Rate: 0.5 gpm / 1.9 Lpm
- ADA Compliant, Sensor Activated, 6 VDC, Chrome Plated Brass, Pedestal Hand Washing Faucet with the following features:
- Splash-proof Circuit Control Module
- Adjustable Infrared Sensor Range
- 36" (914 mm) Long Sensor Cable
- 24" (610 mm) Long Flex Hose
- Filtered Solenoid Valve with serviceable Strainer Filter

## ▶ Faucet Electrical Specifications
- Includes Four (4) AA-size Batteries
- 6 VDC Input/Output
- Four (4) Alkaline AA Batteries 2 years at 8,000 cycles/month
- Sensor Range Nominal: 4"-7" (102 mm-179 mm)

## ▶ Soap Dispenser Electrical Specifications
- Ships with battery pack (4 "D" Alkaline batteries included)
- Optional AC adaptor can be purchased separately (part number 0346090)
- Sensor range – nominal 5"
- GFI outlet suggested per code
- 120V/15 Amp




## ▶ Soap Dispenser
- Modular one-piece construction is easy to install on a sink deck surface
- All electronics in spout are sealed
- Designed for drip free foam dispensing operation
- Motor Assembly suspended under counter connected to soap dispenser spout
- Motor Assembly rotates 360 degrees for easy installation
- Battery life of 45,000 activations
- 1,500 dispenses per foam soap bottle
- Ships with 2 bottles of non-scented, non-colored foam soap (1500ml per bottle)
- Additional foam soap can be purchased through Sloan (ESD-321) or GOJO distribution (8565-02-N6300GN)

## ▶ Compliance & Certifications
ASME A112.18.1 and CSA B125.1

LOW-LEAD UPC C ®

CALGreen

This space for Architect/Engineer Approval

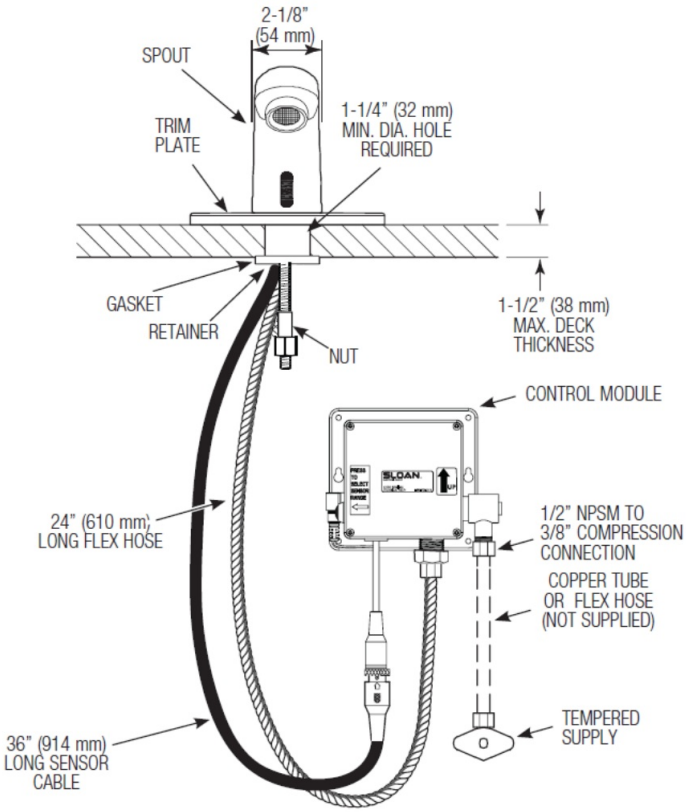


SF-2150-4 Faucet

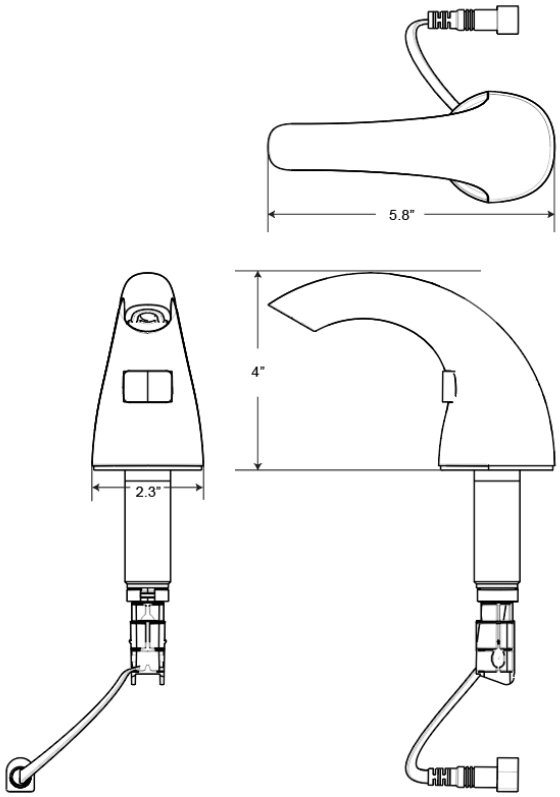


ESD-2100 Soap Dispenser