SF-Series Faucet
SF-2150-4 0.35 GPM

▶ Code Number
3362170

▶ Description
Sensor Activated, Electronic, Pedestal Hand Washing Faucet for tempered or hot/cold water operation.

▶ Flow Rates
0.35 gpm/1.3 Lpm Multi-Laminar

▶ Specifications
ADA Compliant, Sensor Activated, 6 VDC, Chrome Plated Brass, Pedestal Hand Washing Faucet with the following features:

- Splash-proof Circuit Control Module
- Adjustable Infrared Sensor Range
- 36" (914 mm) Long Sensor Cable
- 24" (610 mm) Long Flex Hose
- Filtered Solenoid Valve with serviceable Strainer Filter
- 6 VDC Plug-in Adapter (Model SF-2100 only)
- Non-aerated Spray Head
- Includes Four (4) AA-size Batteries
- Includes appropriate Mounting Hardware
- Trim Plate Kit for 4" (102 mm) Centerset Sink

▶ Accessories (ordered separately)
Standard Outlet

☐ SFP-13 0.5 gpm/1.9 Lpm Spray Head

☐ SFP-23 2.2 gpm/8.3 Lpm Aerator Spray Head

Vandal Resistant Outlet

☐ EAF-15 0.5 gpm/1.9 Lpm Vandal Resistant Spray Head

☐ SFP-24 2.2 gpm/8.3 Lpm Vandal Resistant Aerator Spray Head

Faucet Extension Kit

☐ SFP-30-A Faucet Extension Kit

Adapters

☐ SFP-6 110 VAC/6 VDC Plug-in Adapter

☐ SFP-20 220 VAC/6 VDC Type G Rectangular (UK) Plug-in Adapter

☐ SFP-25 220 VAC/6 VDC Type C Round Pin (Euro) Plug-in Adapter

☐ SFP-26 220 VAC/6 VDC Type A Flat Blade (Asia) Plug-in Adapter

☐ SFP-35-A Gang Adapter Kit, includes 1 Plug-in Gang Adapter, 5 Splitter Cables and 1 Extension Cable

☐ SFP-36 71" (1800 mm) 120 VAC/6 VDC Plug-in Gang Adapter

☐ SFP-38 51" (1300 mm) Splitter Cable

☐ SFP-37 51" (1300 mm) Extension Cable



▶ Automatic Operation
The Sloan SF-2100 and SF-2150 Electronic Pedestal Hand Washing Faucets operate by means of an infrared sensor. When the user enters the sensor's effective range, the Solenoid activates the water flow. Tempered water flows from the Faucet until the user steps away. The Faucet then automatically shuts off.

▶ Hygienic
The ultimate in sanitary protection — there are no handles to turn or buttons to push. Helps to control the spread of infectious diseases.

▶ Economical
Automatic operation provides energy savings. Reduces maintenance and operating costs. Designed for quick and easy installation.

▶ Compliance & Certifications
ASME A112.18.1 and CSA B125.1

CEC Compliant

0.25 GPC

CALGreen

LOW-LEAD UPC C ®

This space for Architect/Engineer Approval

SLOAN 10500 SEYMOUR AVE. ● FRANKLIN PARK, ● IL. 60131
Ph: 1-800-9-VALVE-9 or 1-847-671-4300 ● Fax: 1-800-447-8329 or 1-847-671-4380 ● http://www.sloan.com

▶ Time Out Setting
Adjustable time-out setting of 10 or 30 seconds

▶ Control Circuit
6 VDC Input/Output

▶ Adapter
6 VDC Plug-in (Model 2100 only)

▶ Battery Life
Four (4) Alkaline AA Batteries 2 years at 8,000 cycles/month

▶ Solenoid Valve
6 VDC, Serviceable Strainer, 3/8" Compression Inlet, 1/2" NPSM Outlet

▶ Sensor Range
Nominal: 4"-7" (102 mm-179 mm)

▶ DIMENSIONS

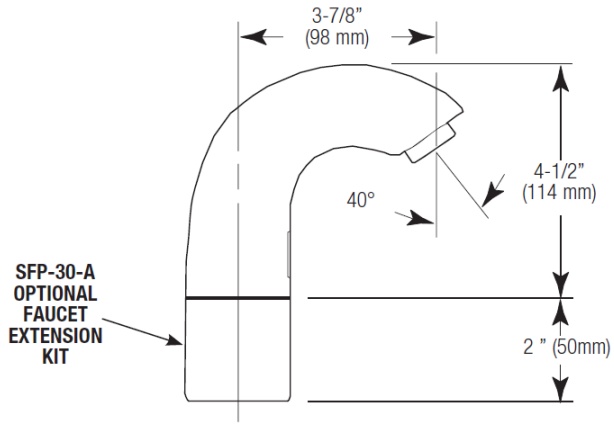

▶ OPERATION

1. When a user's hands enter the sensing range, water flows from the spout.

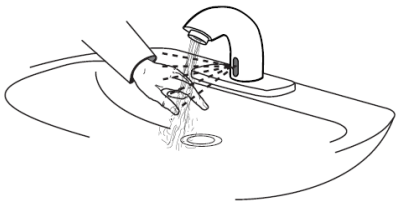

2. When hands are removed, the water flow stops.

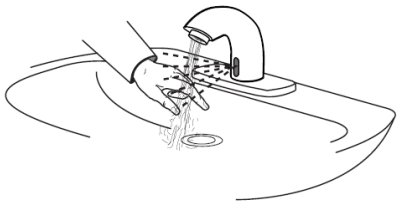

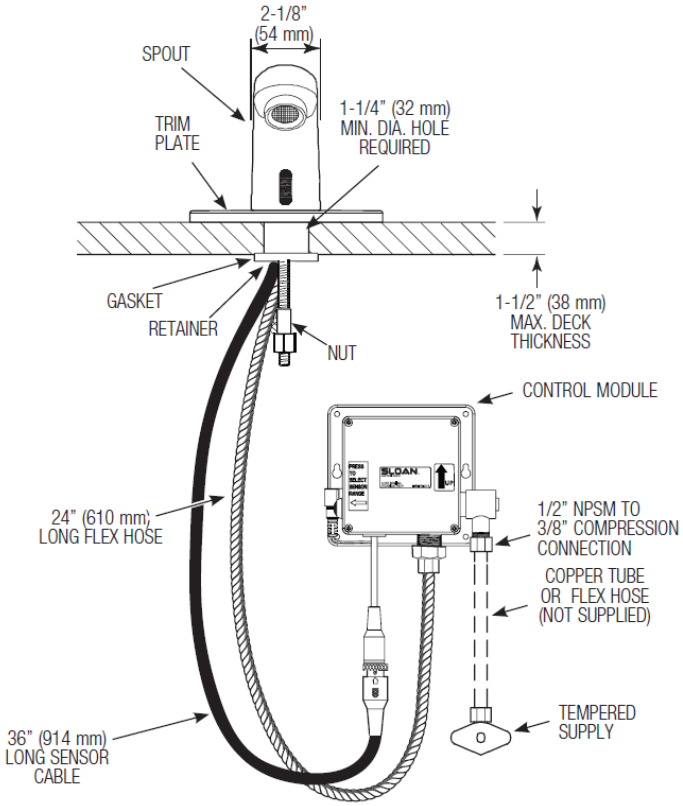

HOT AND COLD WATER SUPPLY APPLICATIONS
(SPECIFY IN MODEL VARIATION)

