SF-2250-4-BAT-BDM-CP-1.0GPM-LAM-IR-FCT

(General Model Name: SF2250-4-BDM CP FCT G'NECK 4" BAT 1.0GPM)

CODE NUMBER

3362151

DESCRIPTION

4" Trim Plate, Battery Power Supply, Below Deck Manual Mixing Valve, Polished Chrome Finish, 1.0 gpm, Laminar Spray, Infrared Sensor, Sloan® Battery-Powered Deck-Mounted Gooseneck Body Faucet.

DETAILS

- Flow Rate: 1.0 gpm (4 Lpm) (1.0GPM)
- Spray Type: Laminar (LAM)
- Sensor Type: Infrared (IR)
- Mounting Type: Single Hole
- Trim Plate: 4" (102mm) (4)
- Power Supply: Battery (BAT)
- Temperature Mixer: Below Deck Manual Mixing Valve (BDM)
- Finish: Polished Chrome (CP)
- Factory Default Timeout: 30s
- Factory Default GPC: 0.5

FEATURES

Commercial Grade, ADA Compliant, Electronic, Sensor-Activated, Brass Gooseneck Hand Washing Faucet with the following features:

- Adjustable Infrared Sensor Range
- 36” (914 mm) Long Sensor Cable
- 24” (610 mm) Long Flex Hose
- Filtered Solenoid Valve with serviceable Strainer Filter
- Includes Four (4) AA-size Batteries
- Includes appropriate Mounting Hardware

ELECTRICAL SPECIFICATIONS

- Battery Life: 2 years 8,000 cycles/month
- Sensor Range: 0" (0mm)
- Timeout Adjustment Settings: 30s

DOWNLOADS

- SF Series Installation Instructions
- SF Series (FR) Installation Instructions
- SF Series (SP) Installation Instructions
- SFP 35-A Installation Instructions
- Trim Plates Repair and Maintenance Guide
- Sloan 2100/2150 Repair and Maintenance Guide
- Additional Downloads



Variation not shown: 4" Trim Plate

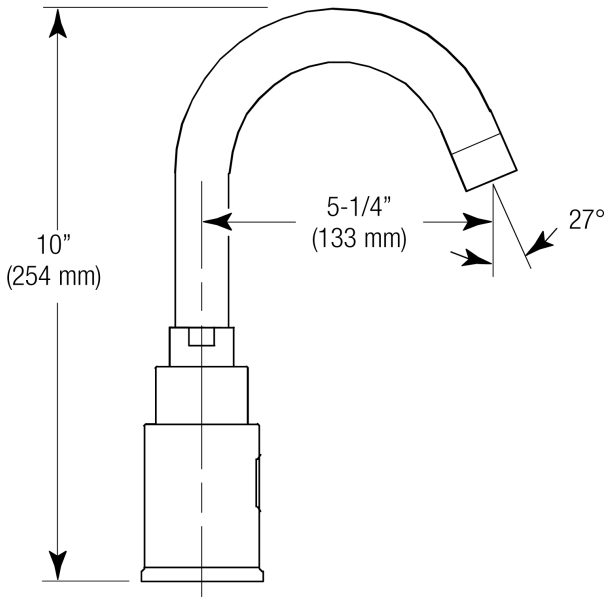

COMPLIANCES & CERTIFICATIONS

(ADA Compliant, ASME A112.18.1 Compliant, CEC Compliant, cUPC Certified, cUPC Low Lead Compliant, Proposition 65, TAS, UPC Certified, UPC Low Lead Compliant)

NOTES

All information contained within this document subject to change without notice.

Looking for other variations of the SF-2250 product? View the general spec sheet with all options.

Sloan 10500 Seymour Ave, Franklin Park, IL 60131
Phone: 800.982.5839 • Fax: 800.447.8329 • sloan.com

Find a matching soap dispenser for this faucet.
Find a compatible sink for this faucet.

WARRANTY

1 Year

ROUGH-IN

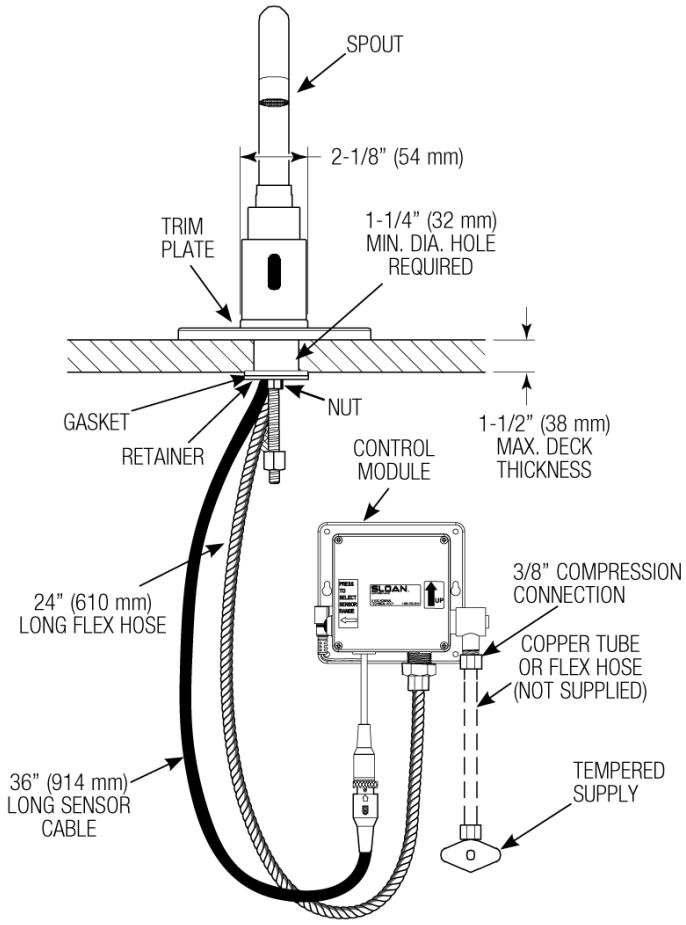

HOT AND COLD WATER SUPPLY APPLICATIONS
(SPECIFY IN MODEL VARIATION)

