Spears® Technical Information

23-Aug-21 02:41:17 AM

Part No: BS37C6-025C **Filters & Strainers** **Basket Strainers**

Desc: 2-1/2 CPVC BASKT STRNR SPG FKM C6 MESH

MSRP: 3701.33 **Part Code:** 297

Weight(lbs): 11.464 **Weight(kg):** 5.2 **Weight(gm):** 5200

Size: 2-1/2" **Color:** GRAY **Material:** CPVC

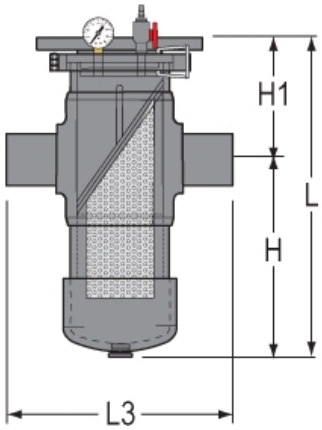

Connection	Spigot
O-Ring	FKM
Mesh Sieve	# 6 = (1/8")

H = 10-3/4 **H1** = 8 **L** = 18-3/4 **L3** = 12- 7/8 **Cv Values** = 110

Injection Molded Dimension References:

G = (LAYING LENGTH) intersection of center lines to bottom of socket/thread; 90° elbows, tees, crosses; ± 1/32 inch.

H = Intersection of center lines to face of fitting; 90° elbows tees, crosses; ± 1/32 inch.

J = Intersection of center lines to bottom of socket/thread; 45° elbows; ± 1/32 inch

L = Overall length of fittings; ± 1/16 inch.

M = Outside diameter of socket/thread hub; ± 1/16 inch.

N = Socket bottom to socket bottom; couplings; ± 1/16 inch.

W = Height of cap; ± 1/16 inch

Typical Molded Dimension References

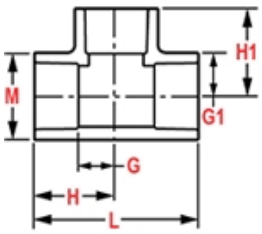

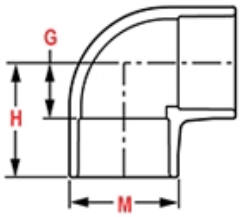

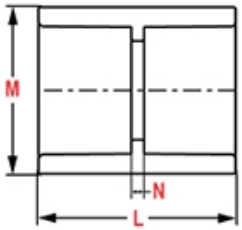

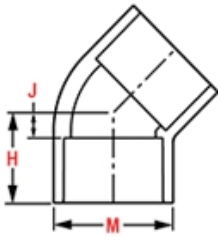

The information printed here is based on current information & product design at the time of publication and is subject to change without notification. Spears® ongoing commitment to product improvement may result in some variation. No representation, guarantees or warranties of any kind are as to its accuracy, suitability for particular application or results to be obtained thereform. For verification of technical data or additional information, please contact Spears® Technical Service Department :: WEST COAST : (818) 364-1611 - EAST COAST : (717) 938-9006