5301PD Power Drive

Replacement Parts

PIPE TOOLS & VISES
SINCE 1896

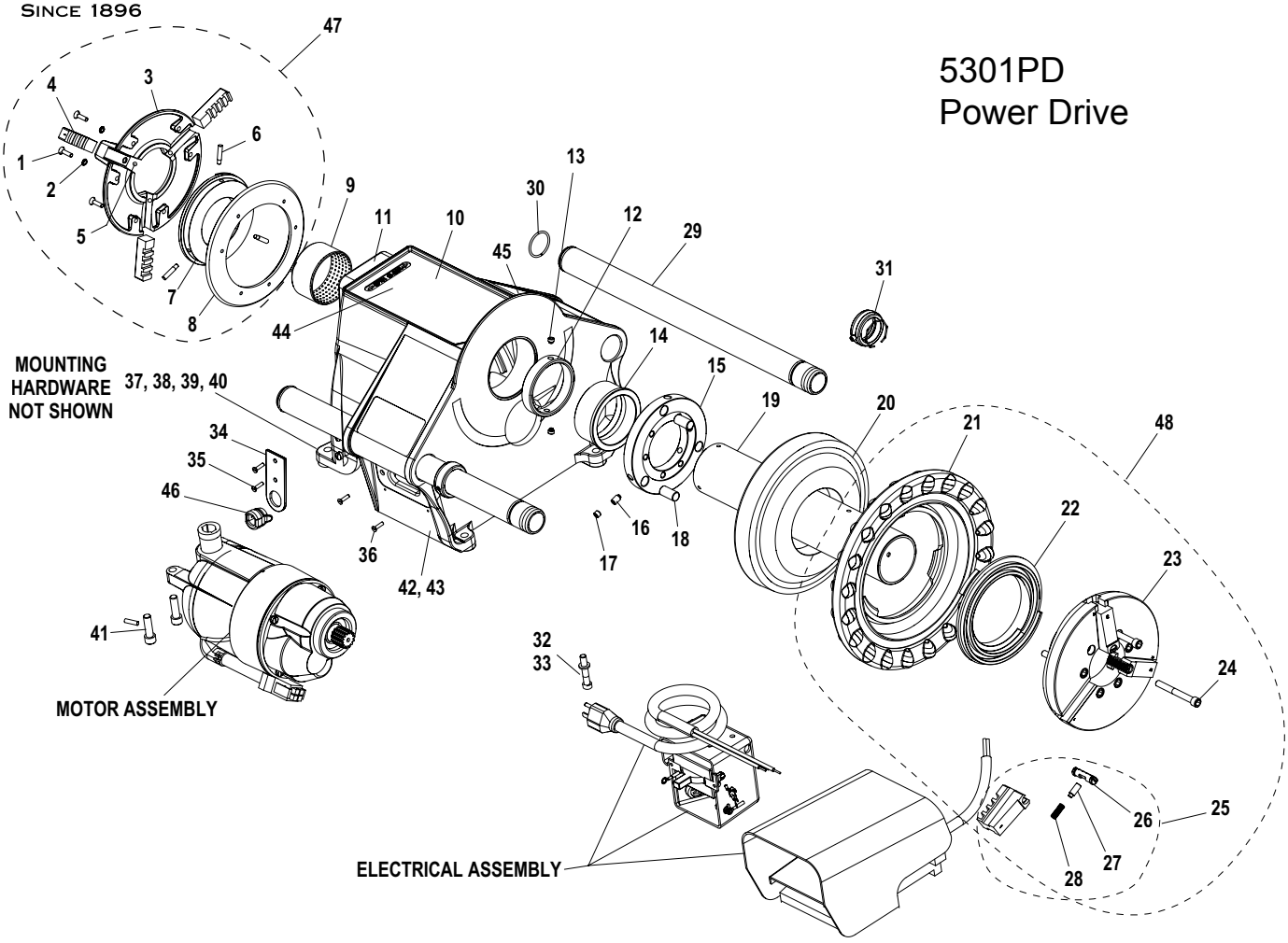

Parts List

Ref. No.	Description	Item Code	Qty.	Ridgid #
1	SCREW, SLOTTED	35400	6	46790 6/Pk
2	LOCK WASHER	35401	6	40270 6/Pk
3	CENTERING HEAD	95400	1	43735
4	REAR JAW SET	95882	1	46500
5	BALL BEARING	35406	3	—
6	STEP PIN	95411	3	45260 5/Pk
7	SCROLL, REAR	95412	1	44095
8	BACK PLATE	95401	1	43740
9	REAR BEARING	95414	1	—
10	BODY	95571	1	—
11	GREASE FITTING	40338	1	46860
12	THRUST RING	95419	1	45345
13	SET SCREW	35404	2	33785 5/Pk
14	FRONT BEARING	95415	1	—
15	DRIVE RING	95427	1	30027
16	SET SCREW	35412	3	45265 3/Pk
17	SET SCREW	35413	3	45300 5/Pk
18	DRIVE DOWEL PIN	35415	3	30022 3/Pk
19	DRIVE SHAFT	95413	1	44100
20	RING GEAR	95409	1	30017
21	HAND WHEEL	95403	1	89150

Ref. No.	Description	Item Code	Qty.	Ridgid #
22	SCROLL, FRONT	95404	1	43540
23	CAP	95405	1	43525
24	BOLT, SHCS	35405	6	45295 6/Pk
25	JAW SET, FRONT	95552	1	44090
26	JAW INSERT	95421	3	44715
27	PIN	95422	3	
28	COMPRESSION SPRING	95451	3	
29	SUPPORT BAR	95483	2	44425
30	SPRING RING	95424	2	44525
31	RETAINING RING ASSEMBLY	95880	2	44725
32	LOCK WASHER	35429	1	—
33	BOLT, SHCS	35403	1	—
34	STRAIN RELIEF PLATE	95423	1	45825
35	SCREW	35407	2	44735 5/Pk
36	SCREW	35408	2	45280
37	BOLT, HEX	35416	4	46670 5/Pk
38	FLAT WASHER	30011	4	44230 5/Pk
39	LOCK WASHER	30033	4	40930 5/Pk
40	WING NUT	23382	4	45385
41	BOLT, SHCS	35411	2	46745 5/Pk

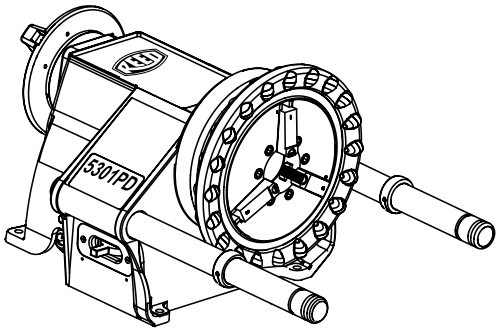

Ref. No.	Description	Item Code	Qty.	Ridgid #
42	DRIVE SCREW	37710	4	
43	NAME PLATE	95418	1	
44	WARNING STICKER	95578	1	88690
45	GREASE FITTING	35450	1	
46	CORD GROMMET	95429	1	46735
47	REAR JAW ASSEMBLY	95476	1	
48	FRONT HANDWHEEL SCROLL / JAW ASSEM.	95484	1	
BODY BEARINGS AND HARDWARE INCLUDES: 9, 10, 11, 14, 39, 40, 41, 45, 46,		95569	1	

RIDGID® is a registered trademark of RIDGID, Inc. and is not associated with Reed Manufacturing Company

Reed Manufacturing Company
1425 West 8th Street
Erie, PA 16502 USA

QUALITY & Service that Last a Lifetime

Phone: 800-666-3691 or 814-452-3691
Fax: 800-456-1697 or 814-455-1697
www.reedmfgco.com

See Also: #55301 Operator's Manual

5301PD
Motor Assembly

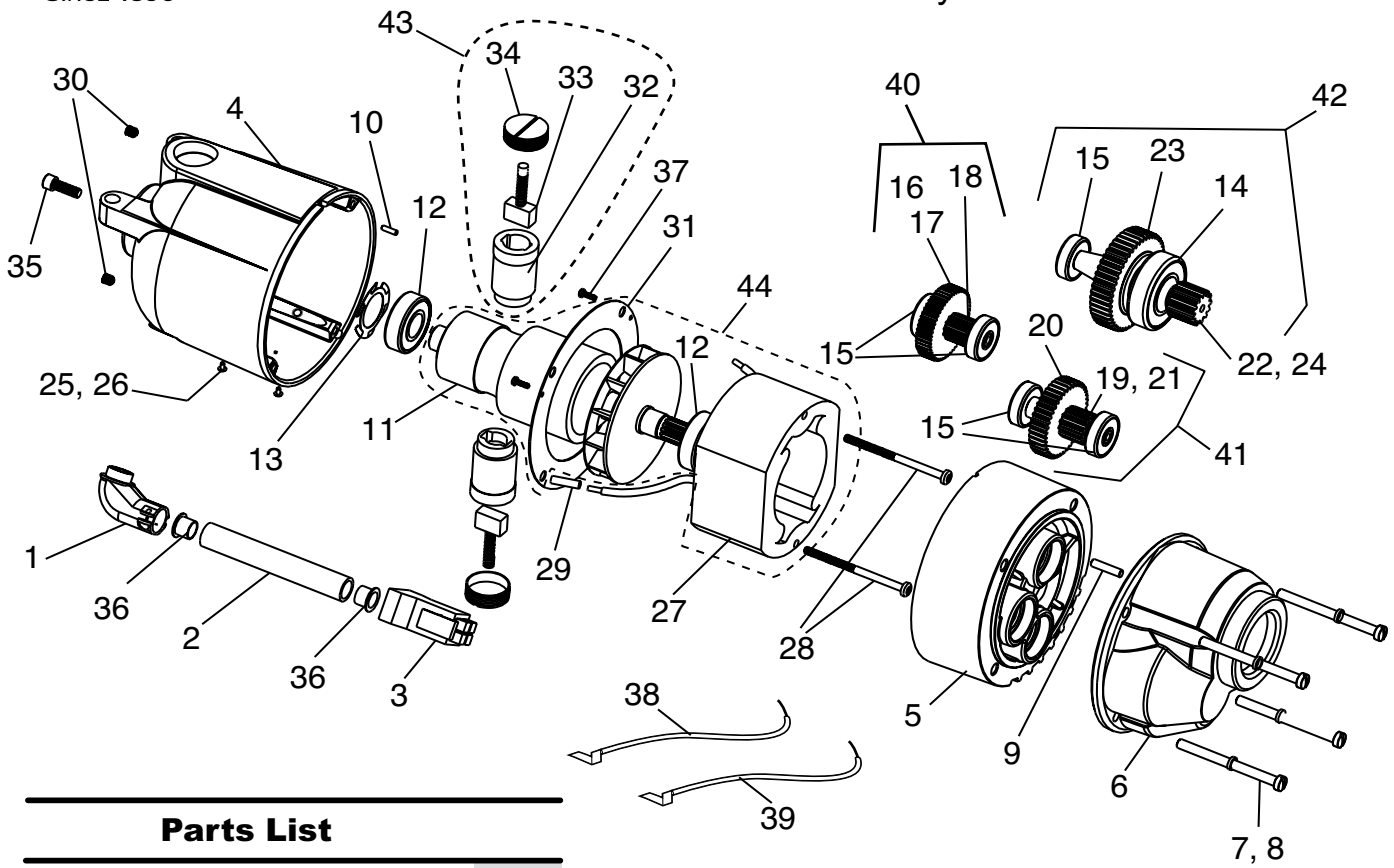

Parts List

Ref. No.	Description	Item Code	Qty.	Ridgid #	
1	90° CONNECTOR	95452	1	46900	
2	CONDUIT	95453	1	—	
3	PLUG	95454	1	46830	
4	MOTOR HOUSING	95406	1	—	
5	FAN HOUSING	95407	1	43165	
6	GEAR COVER	95408	1	42875	
7	LOCK WASHER	35428	4	45150 5/Pk	
8	SCREW	35427	4	45075 5/Pk	
9	DOWEL PIN	95417	1	—	
10	DOWEL PIN	35430	1	—	
11	ARAMATURE W/FAN	95572	1	44010	
12	BEARING	98855	2	44565	
13	FINGER DISK SPRING	95445	1	44580	
14	BEARING	98845	1	45315	
15	BEARING	98846	5	45060	
16	GEAR SHAFT - 1ST	95446	1	44985	See Ref. No. 40
17	SPUR GEAR	95447	1	44985	
18	KEY	48810	1	44985	
19	GEAR SHAFT - 2ND- 38 RPM	95448	1	45005	See Ref. No. 41
	- 57 RPM	95564	1	45005	
20	SPUR GEAR	98809	1	45005	
21	KEY	48810	1	45005	
22	GEAR SHAFT - 3RD	95450	1	45370	See Ref. No. 42
23	SPUR GEAR - 38 RPM	95449	1	45370	
	- 57 RPM	95563	1	45370	
24	KEY	48816	1	45370	
25	NAME PLATE	95456	1	—	
26	DRIVE SCREW	30133	2	85920 5/Pk	

Complete Motor Assembly
38 RPM 95481
57 RPM 95499

Ref. No.	Description	Item Code	Qty.	Ridgid #	
27	FIELD	95573	1	86690 2/Pk	
28	FIELD SCREW	98848	2	44555 2/Pk	
29	INSULATOR TUBE	98885	2	—	
30	SET SCREW	30018	2	39770 5/Pk	
31	FAN PLATE	95474	1	—	
32	BRUSH HOLDER	95455	2	—	See Ref. No. 43
33	BRUSH ASSEMBLY, PAIR	95570	1	44540	
34	BRUSH CAP	95459	2	—	
35	LOCK SCREW	35435	1	—	
36	BUSHING PLASTIC	35434	2	—	
37	SCREW	35449	3	—	
38	BRUSH LEAD, BLUE w/TERMINAL	95580	1	—	
39	BRUSH LEAD, WHITE w/TERMINAL	95579	1	—	
40	SHAFT ASSEMBLY 1	95478	1	44985	
41	SHAFT ASSEMBLY 2 - 38 RPM	95479	1	45005	
	57 - RPM	95549	1		
42	SHAFT ASSEMBLY 3 - 38 RPM	95480	1	45370	
	57 RPM	95550	1		
43	BRUSH/HOLDER/CAP ASSEMBLY	95585	2		
44	FIELD & ARMATURE	95587	1		

RIDGID® is a registered trademark of RIDGID, Inc. and is not associated with Reed Manufacturing Company

Reed Manufacturing Company
1425 West 8th Street
Erie, PA 16502 USA

QUALITY & Service that Last a Lifetime

Phone: 800-666-3691 or 814-452-3691
Fax: 800-456-1697 or 814-455-1697
www.reedmfgco.com

5301PD
Electrical Assembly

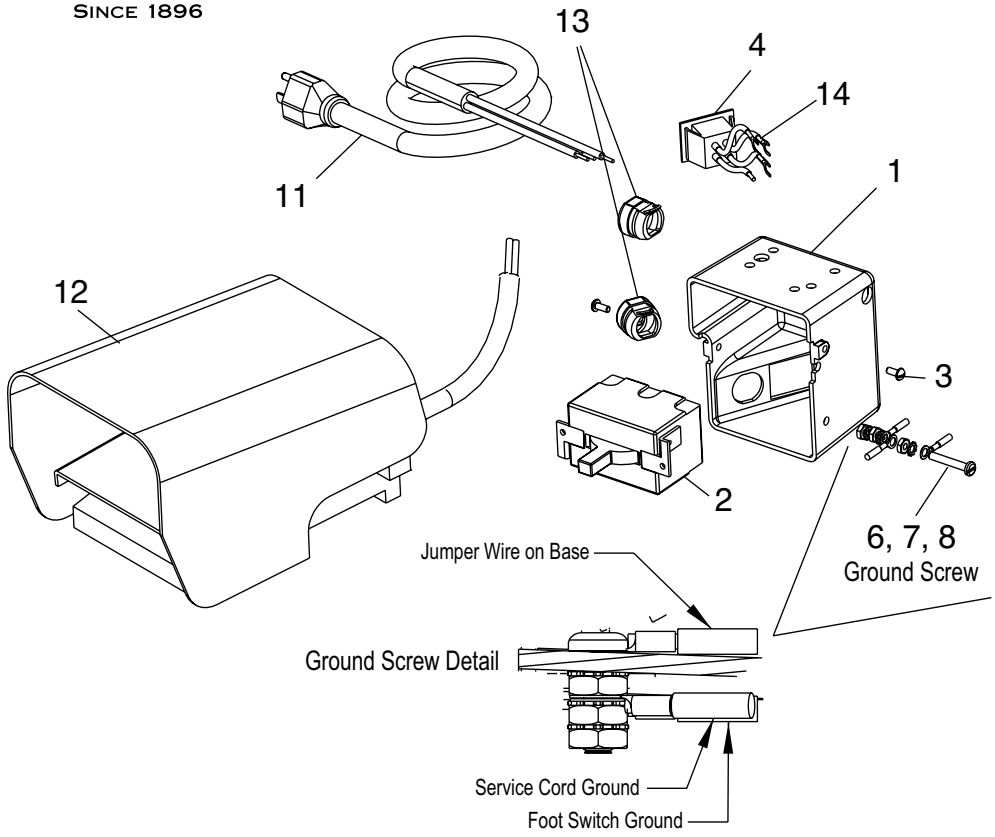

Parts List

Ref. No.	Description	Item Code	Qty.	Ridgid #
1	SWITCH BOX	95430	1	—
2	SWITCH	95557	1	44505
3	SCREW	30106	2	—
4	OUTLET JUMPER ASSY.	95556	1	—
5	RING TONGUE TERMINAL	98859	3	—
6	SCREW (GROUND)	30159	1	—
7	LOCK WASHER	35423	3	46985 5/Pk
8	HEX NUT	30117	3	—
9	GROUND WIRE	95438	1	—
10	SCREW	35431	1	—
11	LINE CORD W/PLUG	95432	1	46740
12	FOOT SWITCH W/CORD	95574	1	36642
13	CORD GROMMET	95429	3	46735
14	SPADE TERMINAL	35436	4	—

5301PD
Wiring Schematic

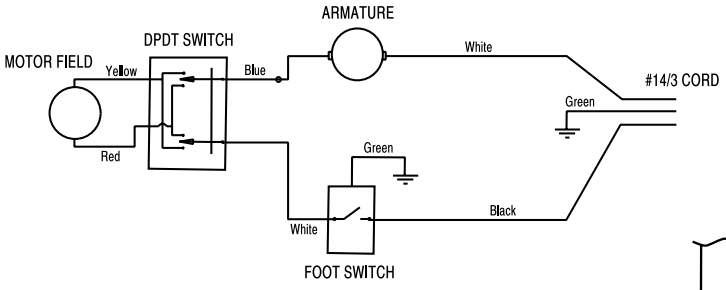

5301PD
Wiring Diagram

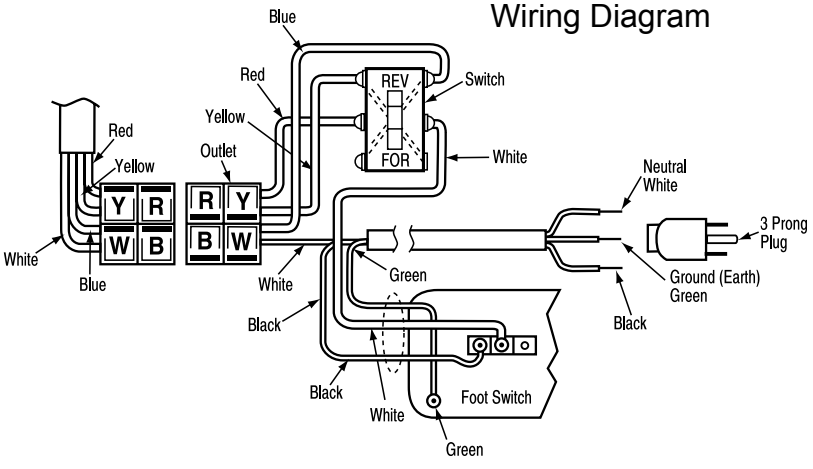

RIDGID® is a registered trademark of RIDGID, Inc. and is not associated with Reed Manufacturing Company

Reed Manufacturing Company
1425 West 8th Street
Erie, PA 16502 USA

QUALITY & Service that Last a Lifetime

Phone: 800-666-3691 or 814-452-3691
Fax: 800-456-1697 or 814-455-1697
www.reedmfgco.com

5301PDPC #05309
5301PD Cutter Adapter

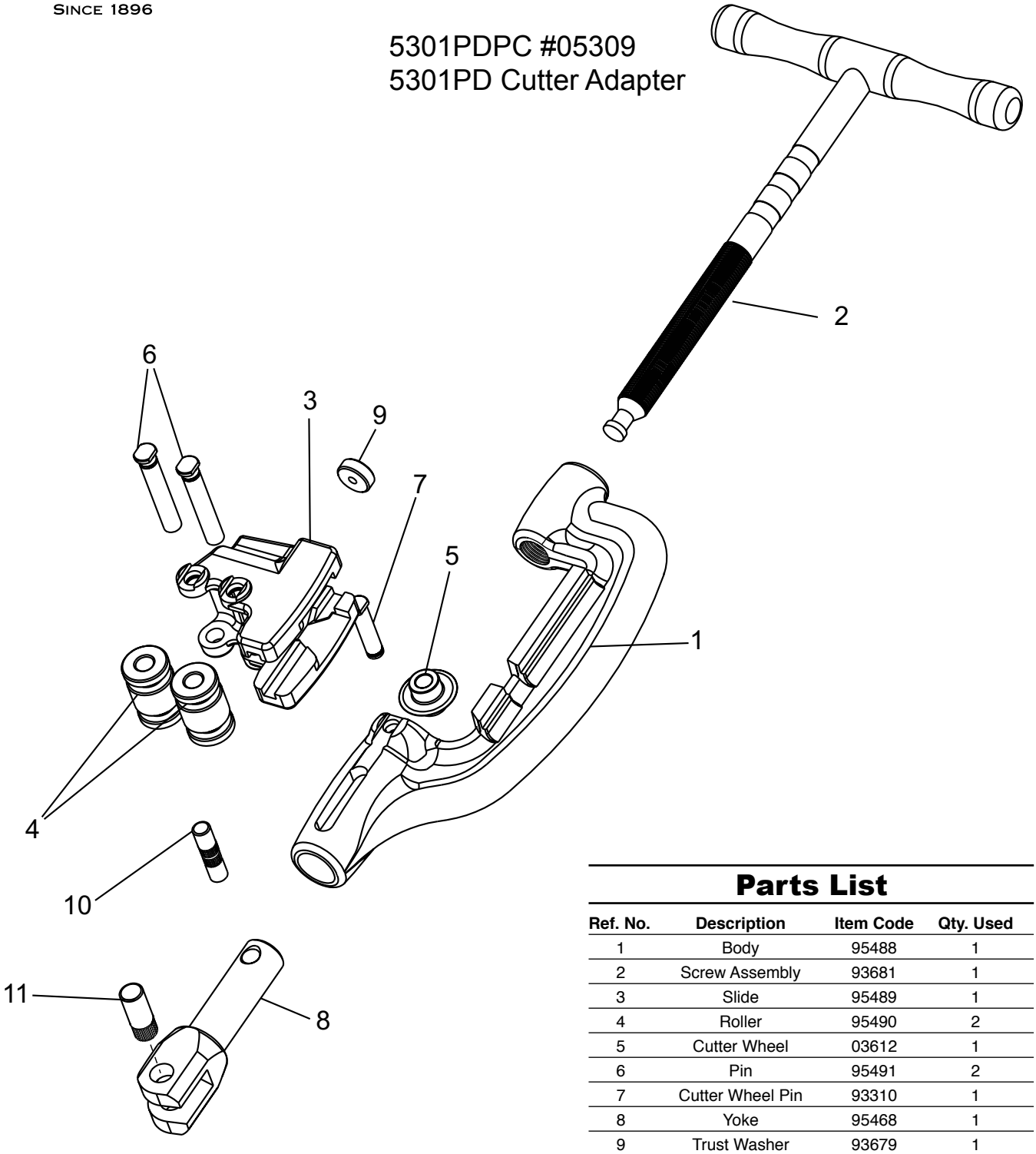

Parts List

Ref. No.	Description	Item Code	Qty. Used
1	Body	95488	1
2	Screw Assembly	93681	1
3	Slide	95489	1
4	Roller	95490	2
5	Cutter Wheel	03612	1
6	Pin	95491	2
7	Cutter Wheel Pin	93310	1
8	Yoke	95468	1
9	Trust Washer	93679	1
10	Knurled Pin	95560	1
11	1/ 2 x 1-1/4 Pin	95561	1

5301PDR #05308
5301PD Reamer Adapter

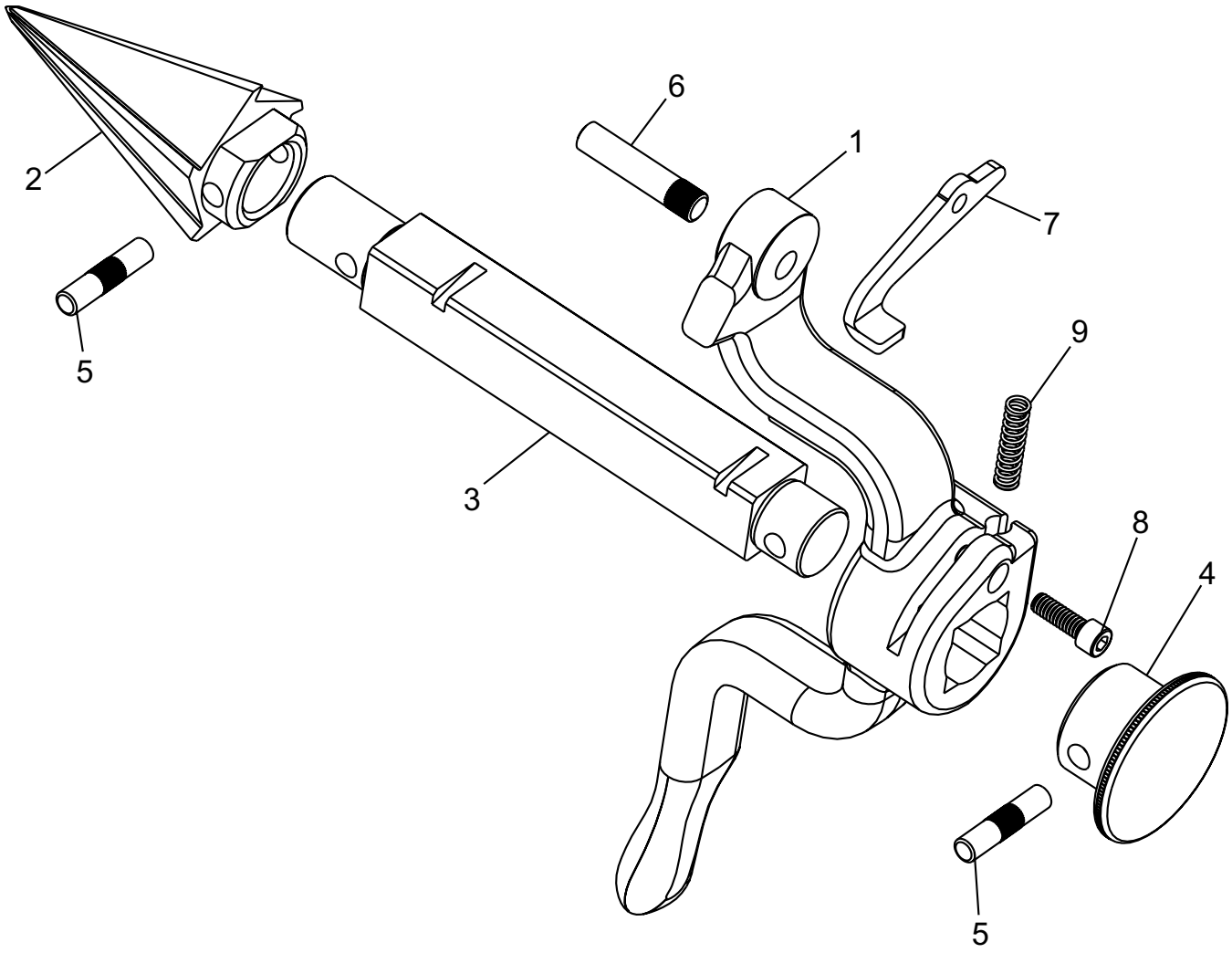

Parts List

Ref. No.	Description	Item Code	Qty. Used
1	Arm	95487	1
2	Reamer	95492	1
3	Bar	95493	1
4	Knob	95494	1
5	Pin	95495	2
6	Hinge Pin	95496	1
7	Latch	95497	1
8	1/4 x 3/4” Pin	30004	1
9	Spring	95451	1

CARRIAGE #05307
5301PD Carriage Adapter

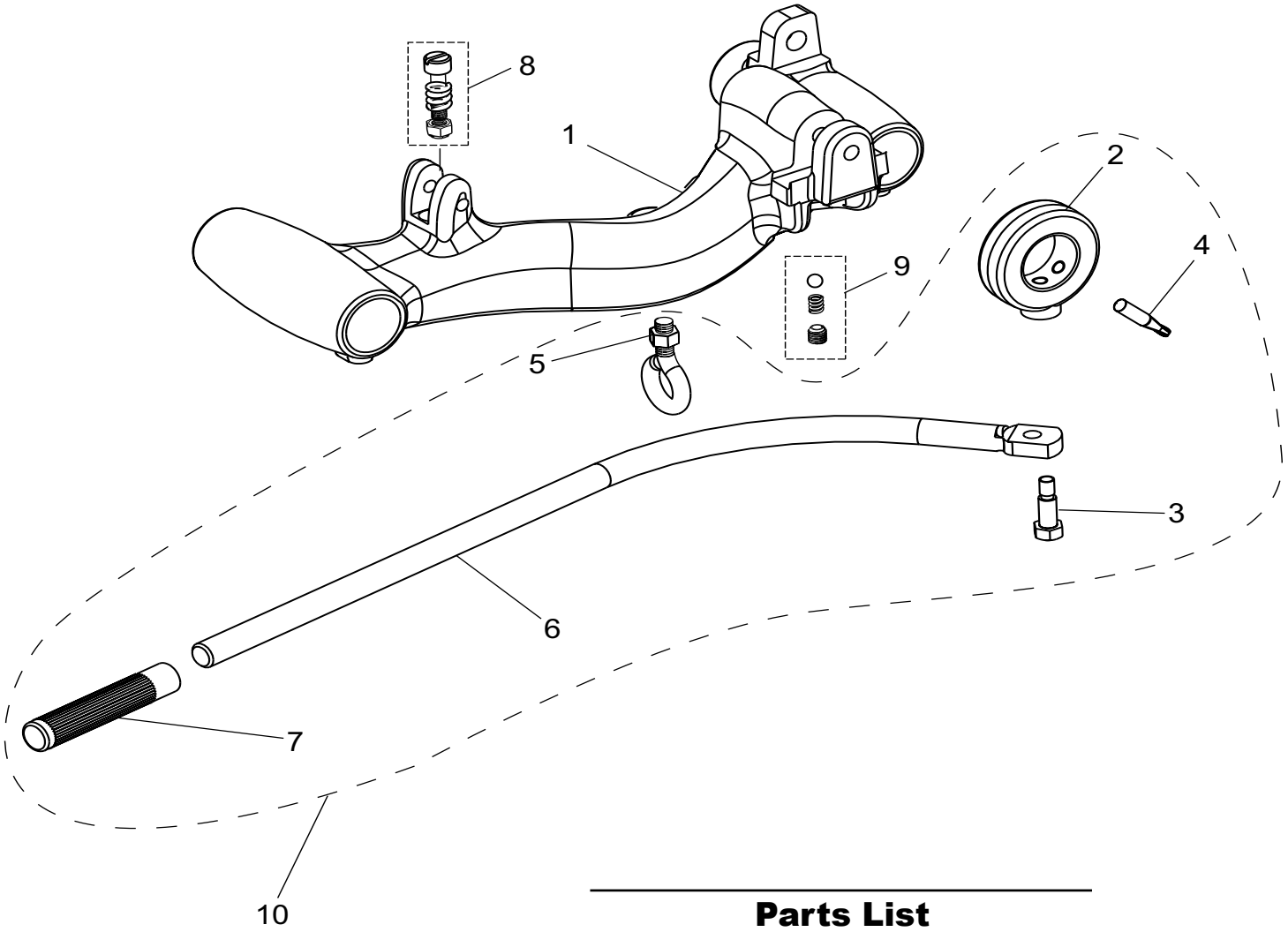

Parts List

Ref. No.	Description	Item Code	Qty. Used
1	Carriage	95465	1
2	Collar	95410	1
3	Shoulder Bolt	35424	1
4	Thumb Screw	45425	1
5	Eye Bolt	45550	1
6	Lever Arm	95551	1
7	Grip	92754	1
8	Stop Bolt Assembly	95881	1
9	Ball Retainer Kit	95833	1

5301PDTP #05305
5301PD Tripod

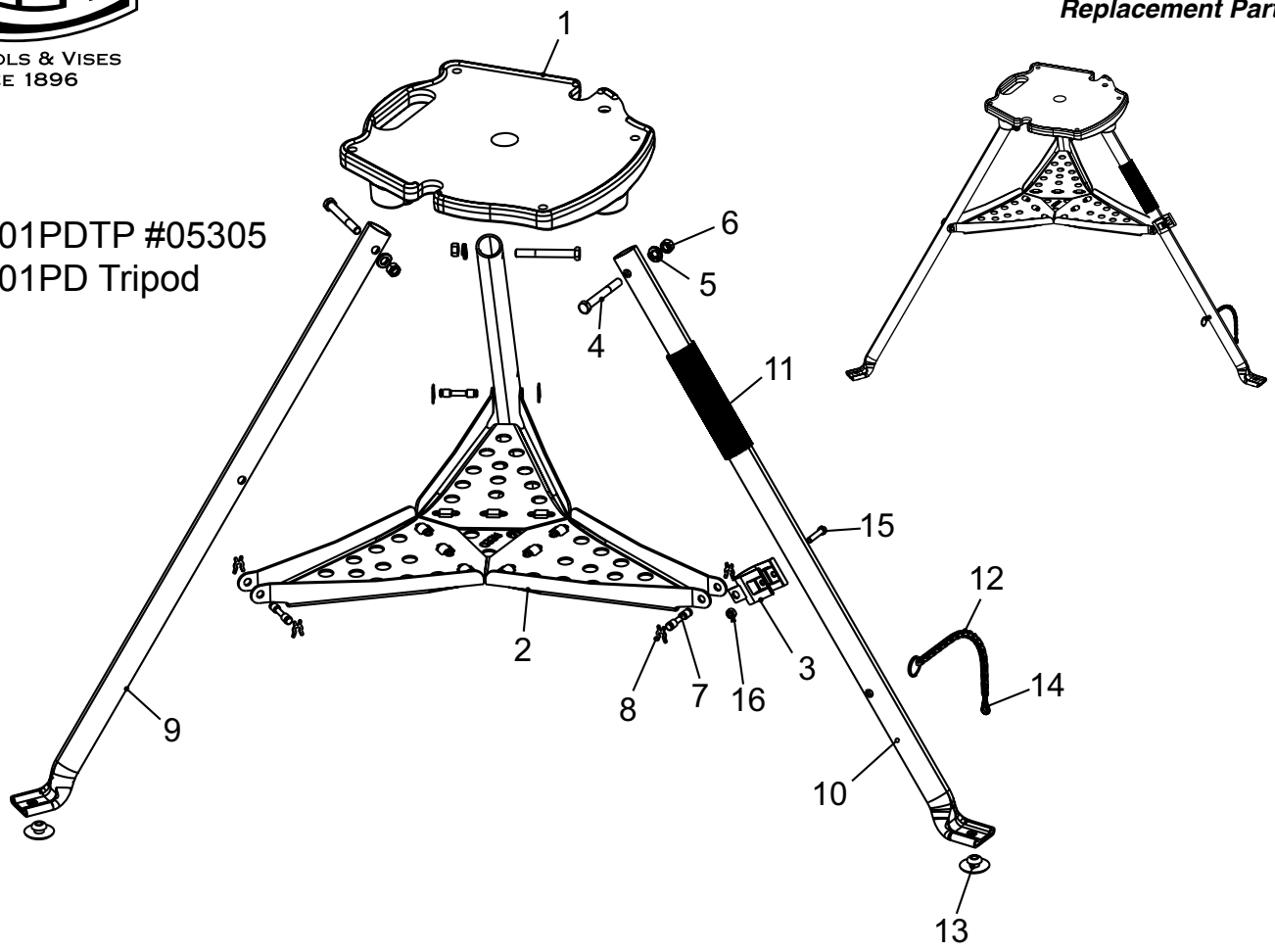

Parts List

Ref. No.	Description	Item Code	Qty. Used
1	5301PD Base	95398	1
2	Tray Assembly	99004	1
3	Tray Support Clamp	40194	1
4	Leg Bolt	30187	3
5	Nut	30032	3
6	Lock Washer	30033	3
7	Tray Pin	99008	6
8	X Washer	99010	2
9	Front Leg	45465	2
10	Rear Leg	45466	1
11	Handle Grip	40183	1
12	Leg Chain Assembly	95566	1
13	Grommet	40171	3
14	Clip	40205	1
15	Screw	39005	1
16	Nut	30123	1

TRANSP #05306
300PD Transporter

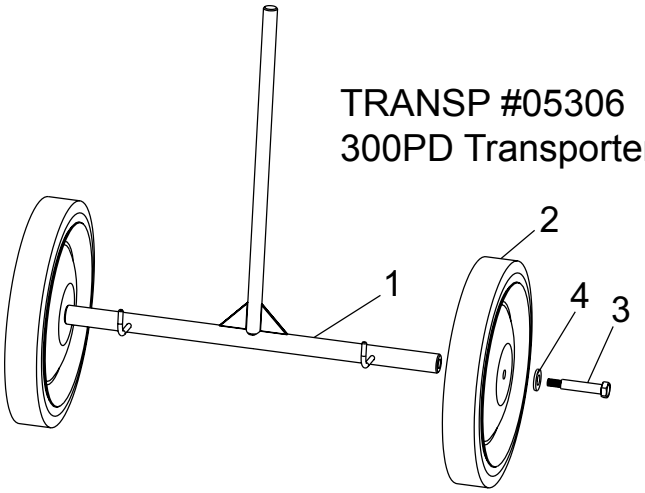

Parts List

Ref. No.	Description	Item Code	Qty. Used
1	Weldment Axle	95559	1
2	Semi-Pneumatic Wheel	95473	2
3	Hex Head Shoulder Screw	35448	2
4	1/2 x 1/8 Flat Washer	38845	2