PIPE TOOLS & VISES
SINCE 1896

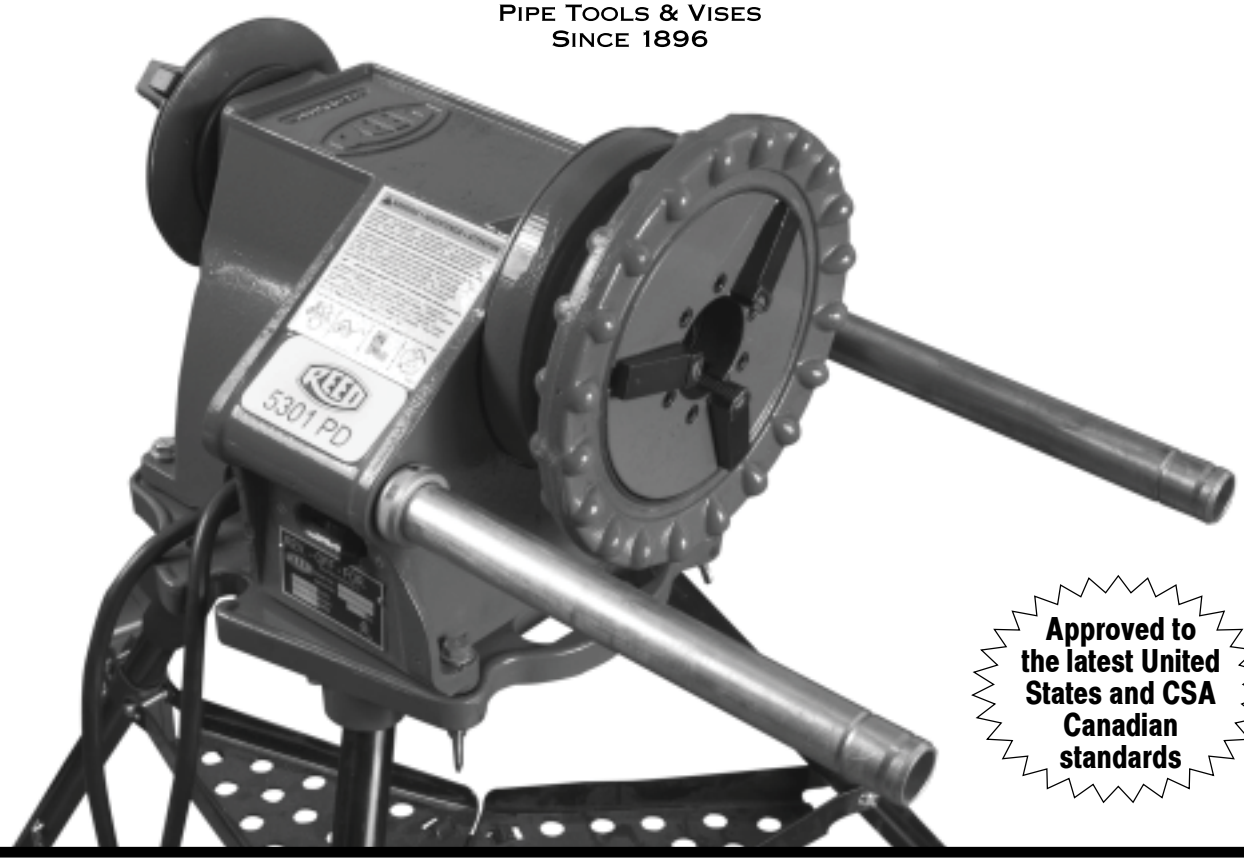

Approved to the latest United States and CSA Canadian standards

5301PD Power Drive

OPERATOR'S MANUAL

The electric-motor-driven REED 5301PD Power Drive centers and chucks pipe and conduit and rotates it while cutting, threading, and reaming operations are performed. FORWARD (clockwise) rotation can be selected with the REV/OFF/FOR switch.

- Includes Footswitch.
- Footswitch cord is 5' 6" (1676 mm) long.

WARNING!

READ AND UNDERSTAND ALL INSTRUCTIONS. FAILURE TO FOLLOW ALL INSTRUCTIONS LISTED INSIDE MAY RESULT IN ELECTRIC SHOCK, FIRE, AND/OR SERIOUS PERSONAL INJURY.

SAVE THESE INSTRUCTIONS!

REED MANUFACTURING COMPANY
1425 WEST 8TH ST. P.O. BOX 1321, ERIE, PA 16512 USA PHONE: 800-666-3691 OR 814-452-3691 FAX: 800-456-1697 OR 814-455-1697
www.reedmfgco.com

0416-55301

TABLE OF CONTENTS

General Safety Information **3**
- Work Area Safety **3**
- Electrical Safety **3**
- Personal Safety **3**
- Tool Use and Care **4**
- Service **4**

Specific Safety Information **4**
- Foot Switch Safety **4**
- Threading Machine Safety **5**
- Machine Maintenance **5**

Description, Specifications and Accessories **5**
- Description **5**
- Specifications **5**
- Accessories **5**

Operation Using Hand Tools **6**
- Installing Pipe in Power Drive **6**
- Cutting Pipe with Hand Cutter **6**
- Reaming Pipe with Hand Reamer **6**
- Threading Pipe with Hand Threader **6**

Operation Using Power Drive Mounted Tools **7**
- Installing 05307 Carriage, Die Head, 05308 Reamer, and 05309 Cutter **7**
- Cutting Pipe with 05309 Cutter **7**
- Reaming Pipe with 05308 Reamer **8**
- Threading Pipe with R811 Die Head **8**
- Installing Dies in R811 Die Head **8**

Maintenance Instructions **9**
- Jaw Insert Replacement **9**
- Lubrication **9**
- Motor Brush Replacement **9**
- Motor Replacement **9**

Parts Diagrams **10**

Wiring Diagram and Wiring Schematics **16**

Lifetime Warranty **16**

GENERAL SAFETY INFORMATION

WARNING: READ AND UNDERSTAND ALL INSTRUCTIONS. FAILURE TO FOLLOW ALL INSTRUCTIONS LISTED MAY RESULT IN ELECTRIC SHOCK, FIRE, AND/OR SERIOUS PERSONAL INJURY.

SAVE THESE INSTRUCTIONS!

WORK AREA SAFETY

1. **Keep work area clean and well lit**. Cluttered benches and dark areas invite accidents.
2. **Do not operate tools in explosive atmospheres,** such as in the presence of flammable liquids, gases, or dust. Tools create sparks which may ignite the dust or fumes.
3. **Keep by-standers, children, and visitors away while operating a tool. Distractions can cause you to lose control.**
4. **Do not let visitors contact the tool or extension cord.** Such preventative measures reduce the risk of injury.

ELECTRICAL SAFETY

1. **Grounded tools must be plugged into an outlet, properly installed and grounded in accordance with all codes and ordinances.** Never remove the grounding plug or modify the plug in any way. Do not use adapter plugs. Check with a qualified electrician if you are in doubt as to whether the outlet is properly grounded. If the tool should electrically malfunction or break down, grounding provides a low resistance path to carry electricity away from the user.
2. **Avoid body contact with grounded surfaces** such as pipes, radiators, ranges and refrigerators. There is an increased risk of electrical shock if your body is grounded.
3. **Do not expose electrical parts to rain or wet conditions.** Water entering a tool will increase the risk of electrical shock.
4. **Do not abuse cord.** Never use the cord to carry the tools or pull the plug from the outlet. Keep cord away from heat, oil, sharp edges or moving parts. Replace damaged cords immediately. Damaged cords increase the risk of electrical shock.
5. **When operating a tool outside,** use an outdoor extension cord marked "W-A" Or "W". These cords are rated for outdoor use and reduce the risk of electrical shock.
6. **Connect the tool to an AC power supply** that matches the name plate specification. Incorrect voltage supply can cause electrical shock or burns.
7. **Use only three-wire extension cords** which have three-prong grounding plugs and three-pole receptacles which accept the tool's plug. Use of other extension cords will not ground the tool and increase the risk of electrical shock.
8. **Use proper extension cords** (see Chart). Insufficient conductor size will cause excessive overheating.
9. **Keep all extension cord connections dry and off the ground.** Do not touch plugs or tool with wet hands. Reduces the risk of electrical shock.

Minimum Wire Gauge for Cord Set

Nameplate Amps	TOTAL LENGTH (IN FEET) 0 - 25	26 - 50	51 - 100
0 - 6	18 AWG	16 AWG	16 AWG
6 -10	18 AWG	16 AWG	14 AWG
10 - 12	16 AWG	16 AWG	14 AWG
12 - 16	14 AWG	12 AWG	NOT RECOMMENDED

PERSONAL SAFETY

1. **Stay alert, watch what you are doing and use common sense when operating a tool.** Do not use tool while tired or under the influence of drugs, alcohol, or medications. A moment of inattention while operating power tools may result in serious personal injury.
2. **Dress properly. Do not wear loose clothing or jewelry. Contain long hair.** Keep hair, clothing, and gloves away from moving parts. Loose clothes, jewelry, or long hair can be caught in moving parts.
3. **Avoid accidental starting. Be sure switch is OFF before plugging in.** Carrying tools with your finger on the switch or plugging in tools that have the switch on invites accidents.
4. **Do not overreach.** Keep proper footing and balance at all times. Proper footing and balance enables better control of the tool in unexpected situations.
5. **Use safety equipment.** Always wear eye protection. Dust mask, non-skid safety shoes, hard hat, or hearing protection must be used for appropriate conditions.



6. **Operate machine from side with REV/OFF/FOR switch.**

TOOL USE AND CARE

1. **Use clamp or other practical way to secure and support the workpiece to a stable platform.** Holding the work by hand or against your body is unstable and may lead to loss of control.
2. **Do not force tool.** Use the correct tool for your application. The correct tool will do the job better and safer at the rate for which it is designed.
3. **Do not use tool if switch does not turn it ON or OFF.** Any tool that cannot be controlled with the switch is dangerous and must be repaired.
4. **Disconnect the plug from the power source before making any adjustments, changing accessories, or storing the tool.** Such preventive safety measures reduce the risk of starting the tool accidentally.
5. **Store idle tools out of the reach of children and other untrained persons.** Tools are dangerous in the hands of untrained users.
6. **Maintain tools with care.** Keep cutting tools sharp and clean. Properly maintained tools with sharp cutting edges are less likely to bind and are easier to control.
7. **Check for misalignment** or binding of moving parts, breakage of parts, and any other condition that may affect the tool's operation. If damaged, have the tool serviced before using. Many accidents are caused by poorly maintained tools.
8. **Use only accessories that are recommended by the manufacturer for your model.** Accessories that may be suitable for one tool may become hazardous when used on another tool.
9. **Inspect tool and extension cords periodically and replace if damaged.** Damaged cords increase the risk of electrical shock.
10. **Keep handles dry and clean;** free from oil and grease. Allows for better control of the tool.
11. **Store tools in dry place.** Such measures reduce risk of electrical shock.

SERVICE

1. **Tool service must be performed only by qualified repair personnel.** Service or maintenance performed by unqualified repair personnel could result in injury.
2. **When servicing a tool, use only identical replacement parts.** Follow instructions in the Maintenance section of this manual. Use of unauthorized parts or failure to follow maintenance instructions may create a risk of electrical shock or injury.
3. **Follow instructions for lubricating** and changing accessories. Accidents are caused by poorly maintained tools.

SPECIFIC SAFETY INFORMATION

The Operator's Manual contains specific safety information and instructions for your protection against serious injuries including:

- Loss of fingers, hands, arms or other body parts if clothing or gloves get caught in moving parts;
- Electric shock or burns from contact with wires, motor or other power drive parts:
- Impact injuries, including broken bones if machine tips over or workpiece falls;
- Eye injuries, including being blinded by the workpiece or workpiece chips.
- Read and follow safety labels on machine.
- Know the location and functions of all controls before using.

FOOT SWITCH SAFETY

The foot switch increases safety. The switch shuts off the motor upon removing your foot. Clothing caught in a rotating tool can pull the operator into the machine. Additionally, the machine's high torque could crush or break bones should caught or trapped clothing bind around your arm or other body parts.

WARNING



CLOTHING/GLOVES CAN BE CAUGHT IN MOVING PARTS. FINGERS, HANDS, ARMS OR OTHER BODY PARTS CAN BE CRUSHED OR BROKEN.

- Make sure switch is in the OFF position before plugging in power cord.
- Use foot switch.
- Do not wear gloves.
- Keep sleeves and jacket buttoned.
- Do not reach across machine. Clothing can be drawn into moving parts.
- Operate machine from switch side only.
- Do not block or disconnect foot switch.
- Keep foot switch in working order.
- Make sure you can quickly remove your foot from foot switch.
- Keep hands away from rotating pipe and fittings. Stop machine when screwing fittings on pipe or wiping threads.

THREADING MACHINE SAFETY

1. **Machine is made to thread and cut pipe or bolt. Machine also powers roll grooving equipment.** Follow instructions in Operator's Manual on machine uses. Do not use power drives for other jobs including hole drilling, winch turning, and making/breaking fittings. Other uses may increase the risk of injury.
2. **Secure machine to bench or stand.** This prevents tipping.
3. **Support long heavy pipe with pipe supports.** This prevents tipping.
4. **Do not wear gloves or loose clothing.** Keep sleeves and jackets buttoned. If clothing should become caught in the machine, it will continue to wind up, pulling you into the machine and possibly resulting in serious injury.
5. **Do not reach across the machine or pipe.** Operating the machine from the side with REV/OFF/FOR switch eliminates reaching across.
6. **Do not use machine if foot switch is broken or absent.** The foot switch works as a safety device in preventing serious injury.
7. **Tighten chuck handwheel and engage rear centering device on the pipe before starting the machine.**
8. **Keep hands away from rotating pipe and fittings.** Let the machine stop completely before touching the work. Wipe threads and attach fittings only after the machine stops.
9. **Keep covers in place.** Exposed moving parts may offer a chance for clothing or body parts to become caught in the machinery.

MACHINE MAINTENANCE

1. **Use sharp cutting tools.**
2. **Grease front and rear bearings every 8 hours of use**.
3. **Inspect machine cord.** Replace damaged, frayed, broken or worn machine cord.
4. **Inspect extension cords.** Repair or replace damaged, frayed, broken or worn cords.
5. **Keep handles dry and clean.** Keep free from oil and grease.
6. **When not being used, store machine in a secured, locked area, out of reach of children and people unfamiliar with the threading machine.**
7. **Keep foot switch in working order**.

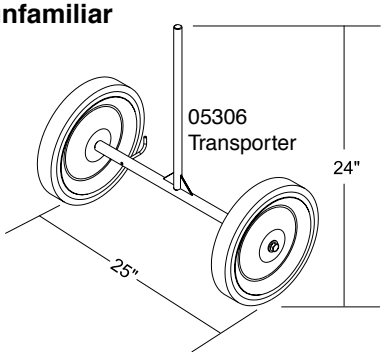

DESCRIPTION, SPECIFICATIONS AND ACCESSORIES

DESCRIPTION

The REED 5301PD Power Drive is an electric-motor-driven power drive which centers and chucks pipe and conduit and rotates it while cutting, threading, and reaming operations are performed. FORWARD (clockwise) rotation can be selected with the REV/OFF/FOR switch.

SPECIFICATIONS

Threading Capacity:

Pipe .....1/8" through 2"

Bolt .....1/4" through 2"

Chuck:..... Chuck with replaceable jaw inserts.

Rear Centering Device:.. Cam action rotates with chuck

Support Bar (2):..... Heavy-duty

Switch (REV/OFF/FOR).. Heavy-duty, bump-proof and reversible

Motor: Universal Type

Horsepower..... 1/2HP

Volts.....120 VAC single phase 60 Hz

Foot Switch (ON/OFF):... Oil and water tight

5301PD Weight: .....90 lbs. (40.9 Kg)

ACCESSORIES	
05305	Tripod - folding stand with tray (29 lbs.)
05306	Transporter provides effortless power drive portability
05307	Carriage with lever (holds die head, cutter and reamer)
05308	Reamer positive locking, 5 flute cone, right hand
05309	Cutter full-floating, wheel-type wide roll 1/8" through 2"
05380	R811 Universal Die Head (quick-opening die head)
06150	Oiler - stops oil waste, keeps dies flooded

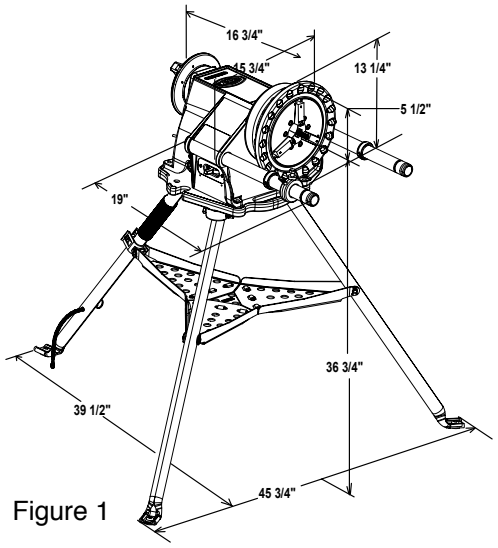

Figure 1

OPERATION USING HAND TOOLS

WARNING: OPERATOR SHOULD BE THOROUGHLY FAMILIAR WITH PRECEDING SAFETY PRECAUTIONS BEFORE ATTEMPTING TO OPERATE THIS EQUIPMENT.

INSTALLING PIPE IN POWER DRIVE

1. Measure and mark length of pipe being worked.
2. If pipe is long enough to be retained by centering device, insert pipe through front or rear of machine. If pipe is short, insert into front of machine.
3. Make certain that pipe is centered in centering device, if used, and tighten centering device.
4. Tighten CHUCK JAWS with a repetitive, counter-clock wise snap spin of HANDWHEEL. This hammering action tightens jaws on pipe. A clockwise rotation snap spin releases jaws.

CUTTING PIPE WITH HAND CUTTER

1. Install pipe.
2. Engage pipe cutter with pipe and align cutter wheel with mark on pipe.
3. Rest PIPE CUTTER frame on SUPPORT BAR (Figure 4) located on switch side of machine. Tighten FEED SCREW HANDLE.
4. With power cord plugged in, turn REV/OFF/FOR switch to FOR (forward) position.
5. Place foot on FOOT SWITCH (Figure 2) to operate machine.
6. Continuously tighten feed screw handle (Figure 3) with both hands until pipe cutoff is completed.
7. Release foot switch and turn REV/OFF/FOR switch to OFF position.

REAMING PIPE WITH HAND REAMER

NOTE: SPIRAL SELF FEEDING REAMERS ARE NOT SUITABLE FOR POWER DRIVE USE.

1. Turn REV/OFF/FOR switch to FOR (forward position).
2. Insert reamer into end of pipe and hold firmly onto handle and handgrip (Figure 5).
3. Step on foot switch and push on reamer handgrip (Figure 5) with right hand to ream pipe.
4. Release foot switch, remove reamer and turn REV/OFF/FOR switch to OFF position.

THREADING PIPE WITH HAND THREADER

1. Place threader on end of pipe with handle resting on support bar (Figure 4) located on switch side.
2. Place 06150 Oiler (Figure 6) under threader and apply REED Thread Cutting Oil on pipe end.
3. Turn REV/OFF/FOR switch to FOR (forward) position.
4. Step on foot switch and push threader (Figure 4) with right hand to engage dies.

NOTE: THREADER IS AUTOMATIC ONCE DIES ARE ENGAGED. APPLY PLENTY OF OIL (FIGURE 6) UNTIL THREADS ARE COMPLETED.

5. Release foot switch once threads are completed.
6. Push back support bar (Figure 4) on switch side.
7. Reverse THREADER RATCHET KNOB.
8. Lower threader handle and pull support bar out. Threader handle is now against lower side of support bar.
9. Turn REV/OFF/FOR switch to REV (reverse) position and back off threader by stepping on foot switch.
10. Release foot switch and turn REV/OFF/FOR switch to OFF position.

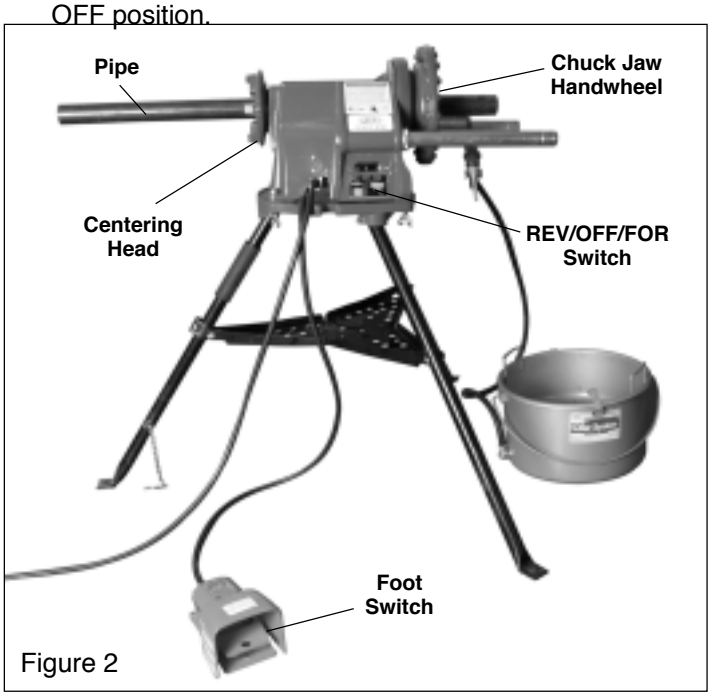

Figure 2

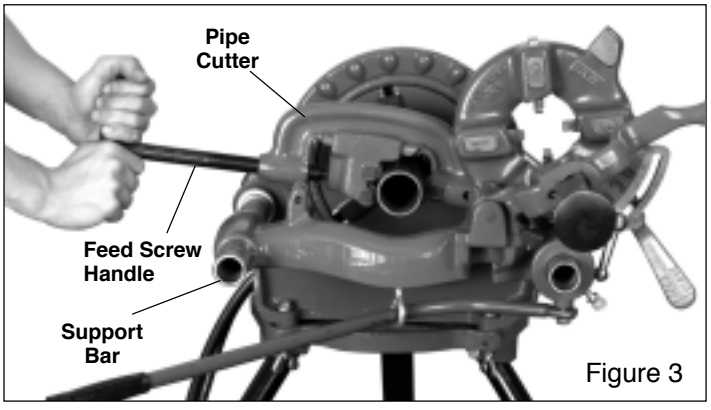

Figure 3

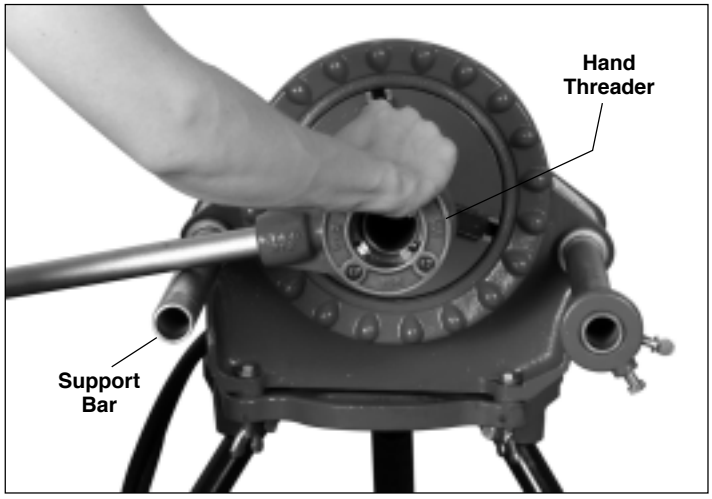

Figure 4

OPERATION USING POWER DRIVE MOUNTED TOOLS

WARNING:
OPERATOR SHOULD BE THOROUGHLY FAMILIAR WITH SAFETY PRECAUTIONS BEFORE ATTEMPTING TO OPERATE THIS EQUIPMENT.

CORRECT OPERATING POSITION FOR CUTTING, THREADING AND REAMING IS TO STAND ON THE SWITCH SIDE OF THE POWER DRIVE, WITH LEFT FOOT OPERATING FOOT SWITCH. (FIGURE 6)

Installing 05307 Carriage, Die Head, 05308 Reamer and 05309 Cutter

1. Pull two support bars on power drive forward (Figure 7).
2. Slide two retaining ring assemblies against power drive body and secure with two set screws.
3. Secure eyebolt assembly to 05307 Carriage.
4. Slide lever arm through eyebolt assembly and secure to collar assembly with shoulder bolt.
5. Slide 05307 Carriage and collar assembly onto support bars.
6. Tighten collar assembly thumb screw into groove on support bar.
7. Insert die head post into mating hole in carriage.

NOTE: WHEN FULLY INSERTED, SPRING LOADED BALL WILL HOLD DIE HEAD IN PLACE.

8. Install cutter and reamer and secure with pins.
9. Install pipe.
10. Position oiler under pipe.

Cutting Pipe with 05309 Cutter

1. Swing reamer and threader back to out-of-way position.
2. Move pipe cutter down onto pipe and move carriage with carriage lever to line up cutter wheel with mark on pipe (Figure 8).
3. Tighten cutter feed screw handle on pipe.
4. Turn REV/OFF/FOR switch to FOR (forward) position and step on foot switch.
5. Continuously turn cutter feed screw handle with both hands until pipe is cut off.
6. Release foot switch and turn REV/OFF/FOR switch to OFF position.
7. Return pipe cutter to out-of-way position.

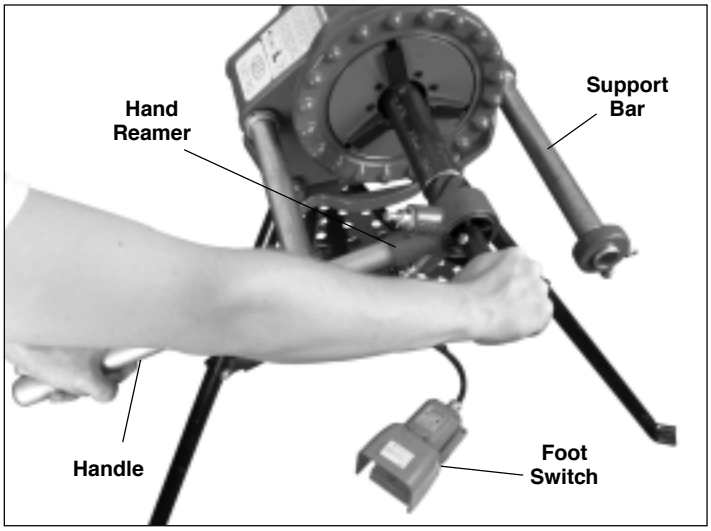

Figure 5

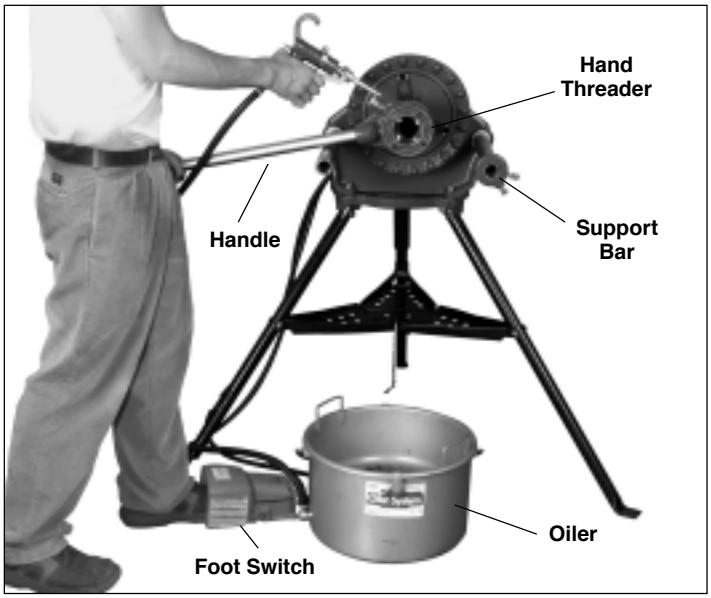

Figure 6

Reaming Pipe with 05308 Reamer

1. Swing die head and cutter back to out-of-the-way position (Figure 10).
2. Move reamer arm down into reaming position.
3. Extend reamer by pressing latch and sliding knob toward pipe until latch engages bar.
4. Turn REV/OFF/FOR switch to FOR and complete reaming by pushing carriage lever with right hand.
5. Position reamer into pipe and complete reaming by pushing carriage lever with right hand.
6. Retract reamer bar and return reamer to out-of-way position.
7. Release foot switch and turn REV/OFF/FOR switch to OFF position.
8. Release speed chuck handwheel and centering head from pipe.
9. Remove pipe.

Threading Pipe with the R811 Die Head

1. Install die set. Refer to "Installing Dies" (page 8) procedure.
2. Swing cutter and reamer to out-of-way position (Figure 9).
3. Lower die head into threading position.
4. Apply Reed Threadguard Cutting Oil to pipe end.
5. Turn REV/OFF/FOR switch to FOR position and step on foot switch.
6. Engage dies with pipe using carriage lever and oil dies with plenty of Reed Threadguard Cutting Oil until thread is completed.
7. When thread is complete, raise throwout lever to the open position, **retracting the dies** on the R811 Universal Die head.
8. Release foot switch and turn REV/OFF/FOR switch to OFF position.
9. Move carriage lever away from pipe end and return die head to up and out-of-way position.

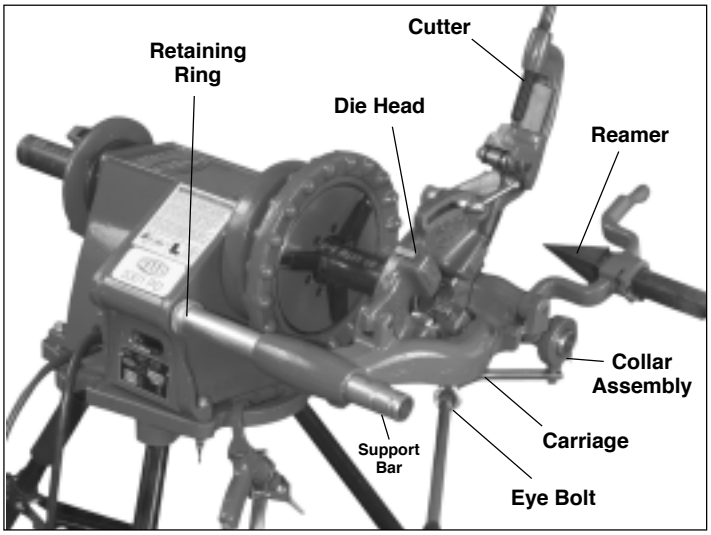

Figure 7 - 5301PD Power Drive with accessories.

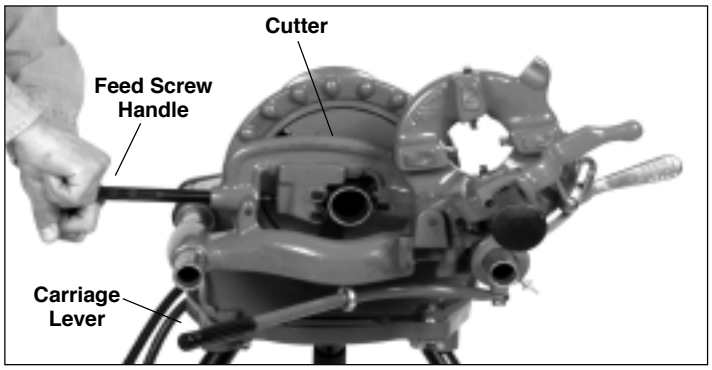

Figure 8 - Cutting pipe with cutter

Installing Dies in the R811 Universal Die Head

The R811 Universal Die Head requires one set of 4 Universal Dies to thread pipe ranging from 1/8" to 2". One set of dies is required for each of the following pipe size ranges:

1/8"

1/4" and 3/8"

1/2" and 3/4"

1" through 2"

NOTE: BOLT THREADING REQUIRES A SEPARATE SET OF DIES FOR EACH BOLT SIZE.

1. Lay die head on bench with numbers face up.
2. Flip throwout lever to OPEN position.
3. Loosen clamp lever approximately three turns.
4. Lift tongue of clamp lever washer up out of slot under size bar. Slide throwout lever all the way to end of slot in the OVER direction indicated on size bar.
5. Remove dies from die head.
6. Die numbers 1 through 4 must agree with those on die head.
7. Insert dies to mark on side of die head.
8. Slide throwout lever back so that tongue of clamp lever washer will drop in slot under size bar.
9. Adjust die head size bar until index line on lock screw or link is aligned with proper size mark on size bar.
10. Tighten clamp lever. For bolt threads, align index line with bolt line on size bar.
11. If oversize or undersize threads are required, set the index line in direction of OVER or UNDER size mark on size bar.

MAINTENANCE INSTRUCTIONS

WARNING: ALWAYS UNPLUG POWER CORD BEFORE SERVICING POWER DRIVE.

JAW INSERT REPLACEMENT

IMPORTANT: WHEN TEETH ON JAW INSERTS BECOME WORN AND FAIL TO HOLD PIPE OR ROD DURING OPERATION, REPLACE ENTIRE SET OF JAW INSERTS. CLEAN TEETH OF JAW INSERTS DAILY WITH WIRE BRUSH.

1. Place screw driver in insert slot and turn 90 degrees in either direction (Figure 11).
2. Place insert sideways on locking pin and press down as far as possible.
3. Hold insert down firmly with screwdriver, turn teeth face up.

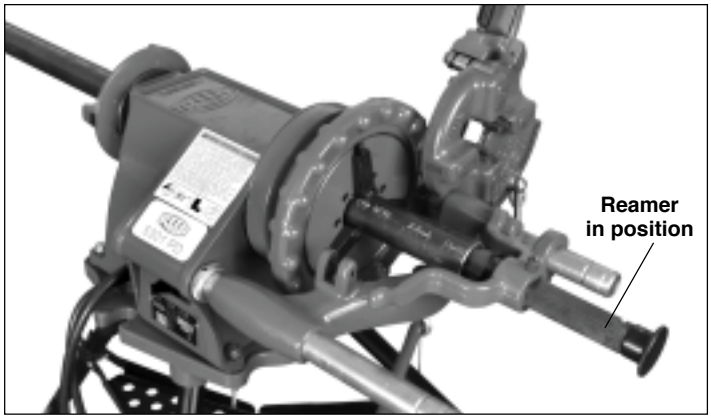

Figure 10

LUBRICATION

Proper lubrication is essential to trouble-free operation and long life of power drive.

Grease main shaft bearing (#95414, #95415) every 2 to 6 months depending on amount of power drive use. Grease fittings are provided on side base, one at each end of shaft. Use a good grade of cup grease.

MOTOR BRUSH REPLACEMENT

Check motor brushes (#95458) every 6 months and replace when worn to less than 1/2 inch. If commutator (#95420) is worn, turn outer dimension of commutator and undercut mica before replacing brushes.



Figure 9 - Threading Pipe with R811 Die Head

MOTOR REPLACEMENT

WARNING: ALWAYS UNPLUG POWER CORD BEFORE SERVICING POWER DRIVE.

1. Unplug motor receptacle from switch box.
2. Remove 2 screws (#35411) holding motor.
3. Loosen lock screw (#35403) in body at neck of motor and lift motor out.

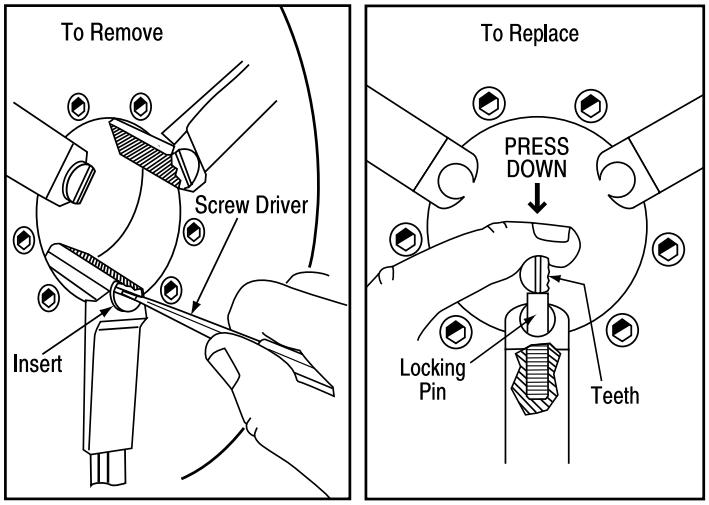

Figure 11

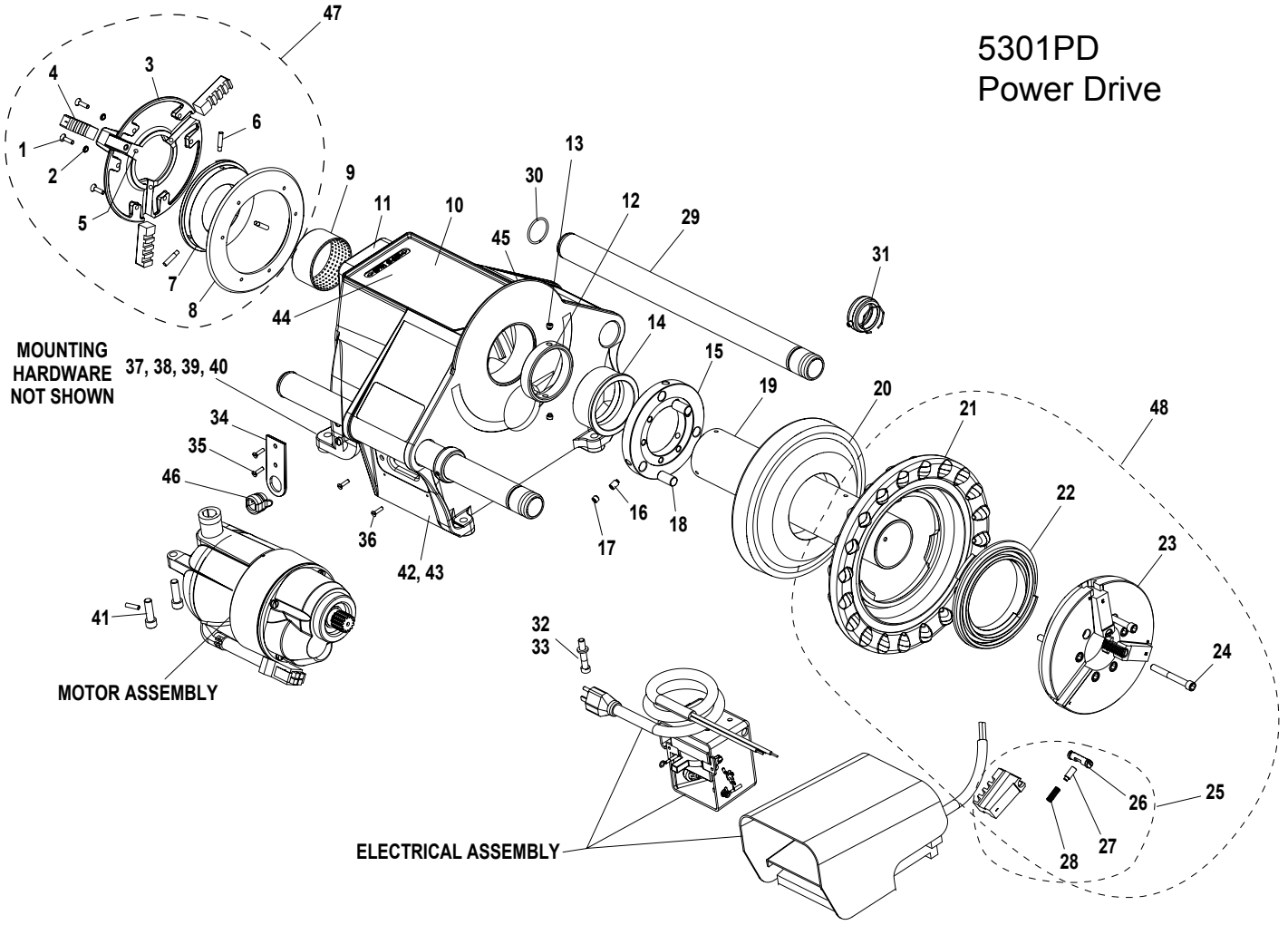

Parts List

Ref. No.	Description	Item Code	Qty.	Ridgid #
1	SCREW, SLOTTED	35400	6	46790 6/Pk
2	LOCK WASHER	35401	6	40270 6/Pk
3	CENTERING HEAD	95400	1	43735
4	REAR JAW SET	95882	1	46500
5	BALL BEARING	35406	3	—
6	STEP PIN	95411	3	45260 5/Pk
7	SCROLL, REAR	95412	1	44095
8	BACK PLATE	95401	1	43740
9	REAR BEARING	95414	1	—
10	BODY	95571	1	—
11	GREASE FITTING	40338	1	46860
12	THRUST RING	95419	1	45345
13	SET SCREW	35404	2	33785 5/Pk
14	FRONT BEARING	95415	1	—
15	DRIVE RING	95427	1	30027
16	SET SCREW	35412	3	45265 3/Pk
17	SET SCREW	35413	3	45300 5/Pk
18	DRIVE DOWEL PIN	35415	3	30022 3/Pk
19	DRIVE SHAFT	95413	1	44100
20	RING GEAR	95409	1	30017
21	HAND WHEEL	95403	1	89150

Ref. No.	Description	Item Code	Qty.	Ridgid #
22	SCROLL, FRONT	95404	1	43540
23	CAP	95405	1	43525
24	BOLT, SHCS	35405	6	45295 6/Pk
25	JAW SET, FRONT	95552	1	44090
26	JAW INSERT	95421	3	44715
27	PIN	95422	3	
28	COMPRESSION SPRING	95451	3	
29	SUPPORT BAR	95483	2	44425
30	SPRING RING	95424	2	44525
31	RETAINING RING ASSEMBLY	95880	2	44725
32	LOCK WASHER	35429	1	—
33	BOLT, SHCS	35403	1	—
34	STRAIN RELIEF PLATE	95423	1	45825
35	SCREW	35407	2	44735 5/Pk
36	SCREW	35408	2	45280
37	BOLT, HEX	35416	4	46670 5/Pk
38	FLAT WASHER	30011	4	44230 5/Pk
39	LOCK WASHER	30033	4	40930 5/Pk
40	WING NUT	23382	4	45385
41	BOLT, SHCS	35411	2	46745 5/Pk

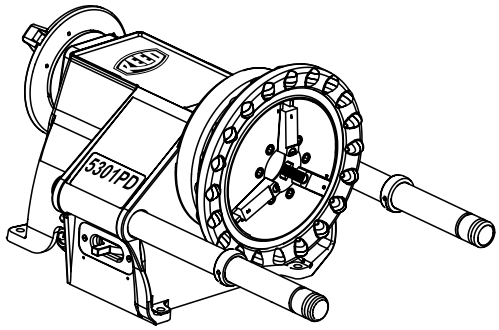

Ref. No.	Description	Item Code	Qty.	Ridgid #
42	DRIVE SCREW	37710	4	
43	NAME PLATE	95418	1	
44	WARNING STICKER	95578	1	88690
45	GREASE FITTING	35450	1	
46	CORD GROMMET	95429	1	46735
47	REAR JAW ASSEMBLY	95476	1	
48	FRONT HANDWHEEL SCROLL / JAW ASSEM.	95484	1	
BODY BEARINGS AND HARDWARE INCLUDES: 9, 10, 11, 14, 39, 40, 41, 45, 46,		95569	1	

RIDGID® is a registered trademark of RIDGID, Inc. and is not associated with Reed Manufacturing Company

See also RP #86

5301PD Motor Assembly

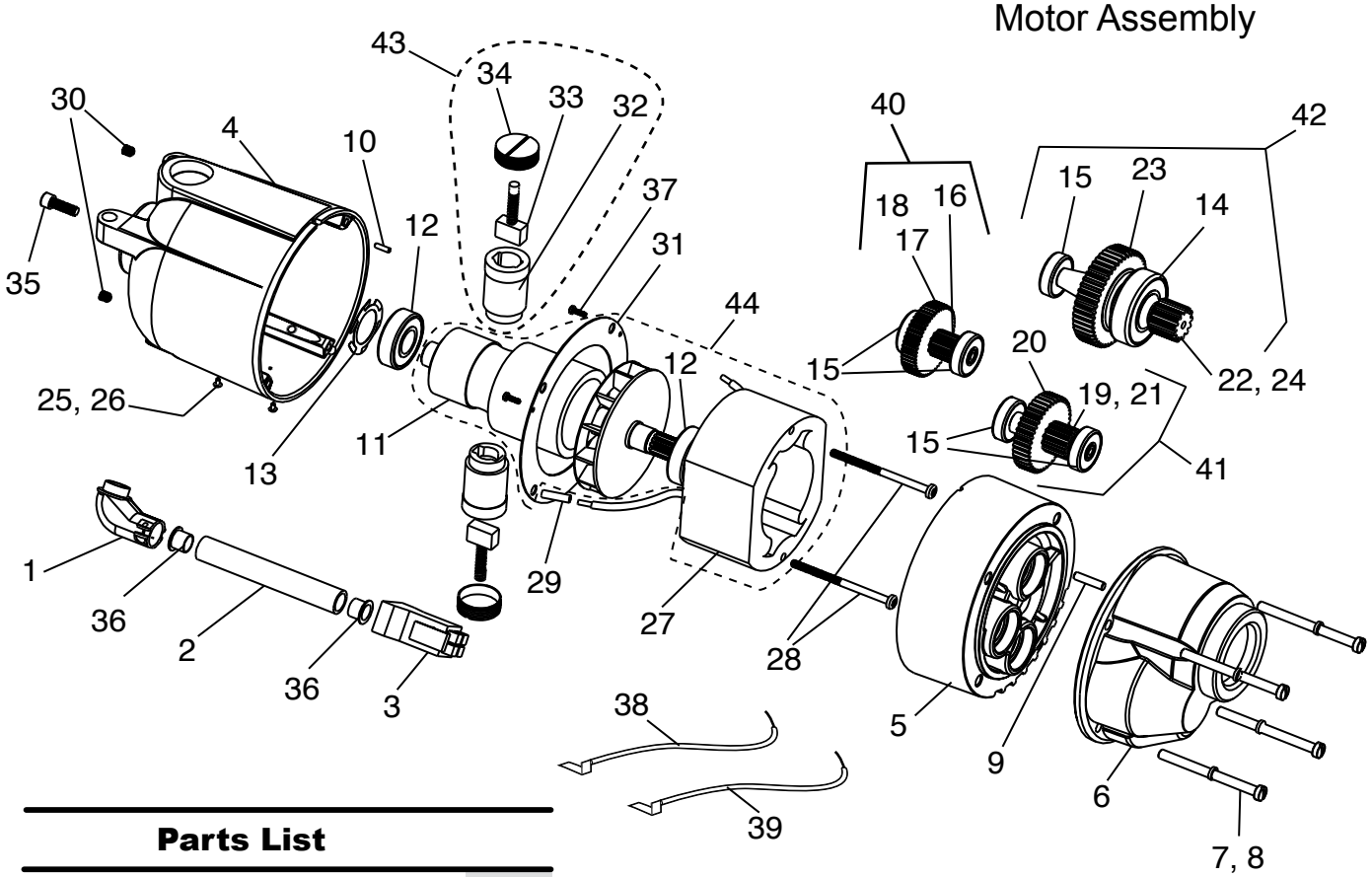

Parts List

Ref. No.	Description	Item Code	Qty.	Ridgid #	
1	90° CONNECTOR	95452	1	46900	
2	CONDUIT	95453	1	—	
3	PLUG	95454	1	46830	
4	MOTOR HOUSING	95406	1	—	
5	FAN HOUSING	95407	1	43165	
6	GEAR COVER	95408	1	42875	
7	LOCK WASHER	35428	4	45150 5/Pk	
8	SCREW	35427	4	45075 5/Pk	
9	DOWEL PIN	95417	1	—	
10	DOWEL PIN	35430	1	—	
11	ARAMATURE W/FAN	95572	1	44010	
12	BEARING	98855	2	44565	
13	FINGER DISK SPRING	95445	1	44580	
14	BEARING	98845	1	45315	
15	BEARING	98846	5	45060	
16	GEAR SHAFT - 1ST	95446	1	44985	See Ref. No. 40
17	SPUR GEAR	98809	1	44985	
18	KEY	48807	1	44985	
19	GEAR SHAFT - 2ND- 38 RPM	95448	1	45005	See Ref. No. 41
	- 57 RPM	95564	1	45005	
20	SPUR GEAR	95447	1	45005	
21	KEY	48810	1	45005	
22	GEAR SHAFT - 3RD	95450	1	45370	See Ref. No. 42
23	SPUR GEAR - 38 RPM	95449	1	45370	
	- 57 RPM	95563	1	45370	
24	KEY	48816	1	45370	
25	NAME PLATE	95456	1	—	
26	DRIVE SCREW	30133	2	85920 5/Pk	

Complete Motor Assembly
38 RPM 95481
57 RPM 95499

Ref. No.	Description	Item Code	Qty.	Ridgid #	
27	FIELD	95573	1	86690 2/Pk	
28	FIELD SCREW	98848	2	44555 2/Pk	
29	INSULATOR TUBE	98885	2	—	
30	SET SCREW	30018	2	39770 5/Pk	
31	FAN PLATE	95474	1	—	
32	BRUSH HOLDER	95455	2	—	See Ref. No. 43
33	BRUSH ASSEMBLY, PAIR	95570	1	44540	
34	BRUSH CAP	95459	2	—	
35	LOCK SCREW	35435	1	—	
36	BUSHING PLASTIC	35434	2	—	
37	SCREW	35449	3	—	
38	BRUSH LEAD, RED w/TERMINAL	95580	1	—	
39	BRUSH LEAD, WHITE w/TERMINAL	95579	1	—	
40	SHAFT ASSEMBLY 1	95478	1	44985	
41	SHAFT ASSEMBLY 2 - 38 RPM	95479	1	45005	
	57 - RPM	95549	1		
42	SHAFT ASSEMBLY 3 - 38 RPM	95480	1	45370	
	57 RPM	95550	1		
43	BRUSH/HOLDER/CAP ASSEMBLY	95585	2		
44	FIELD & ARMATURE	95587	1		

RIDGID® is a registered trademark of RIDGID, Inc. and is not associated with Reed Manufacturing Company

5301PDPC #05309
5301PD Cutter Adapter

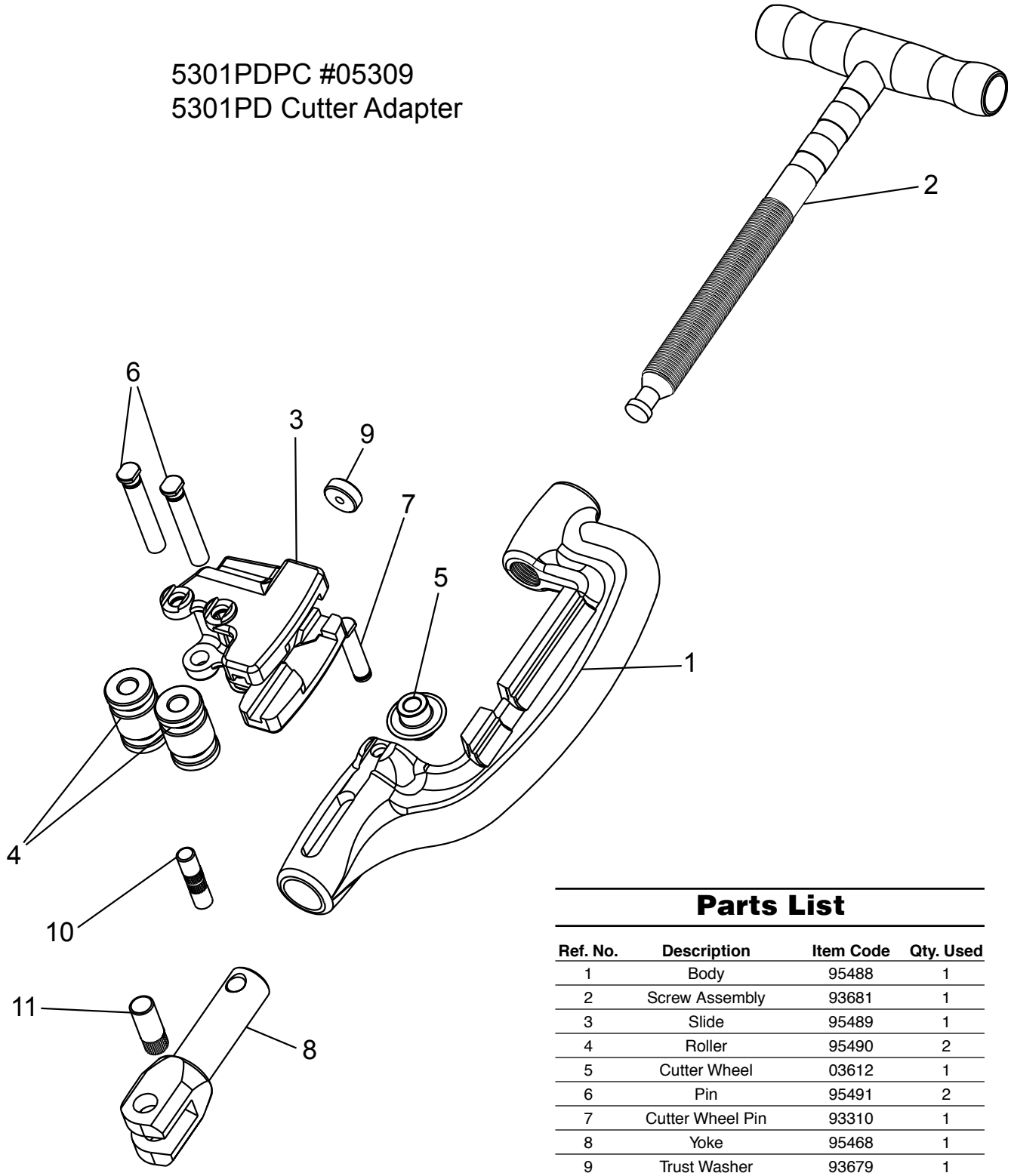

Parts List

Ref. No.	Description	Item Code	Qty. Used
1	Body	95488	1
2	Screw Assembly	93681	1
3	Slide	95489	1
4	Roller	95490	2
5	Cutter Wheel	03612	1
6	Pin	95491	2
7	Cutter Wheel Pin	93310	1
8	Yoke	95468	1
9	Trust Washer	93679	1
10	Knurled Pin	95560	1
11	1/ 2 x 1-1/4 Pin	95561	1

5301PDR #05308
5301PD Reamer Adapter

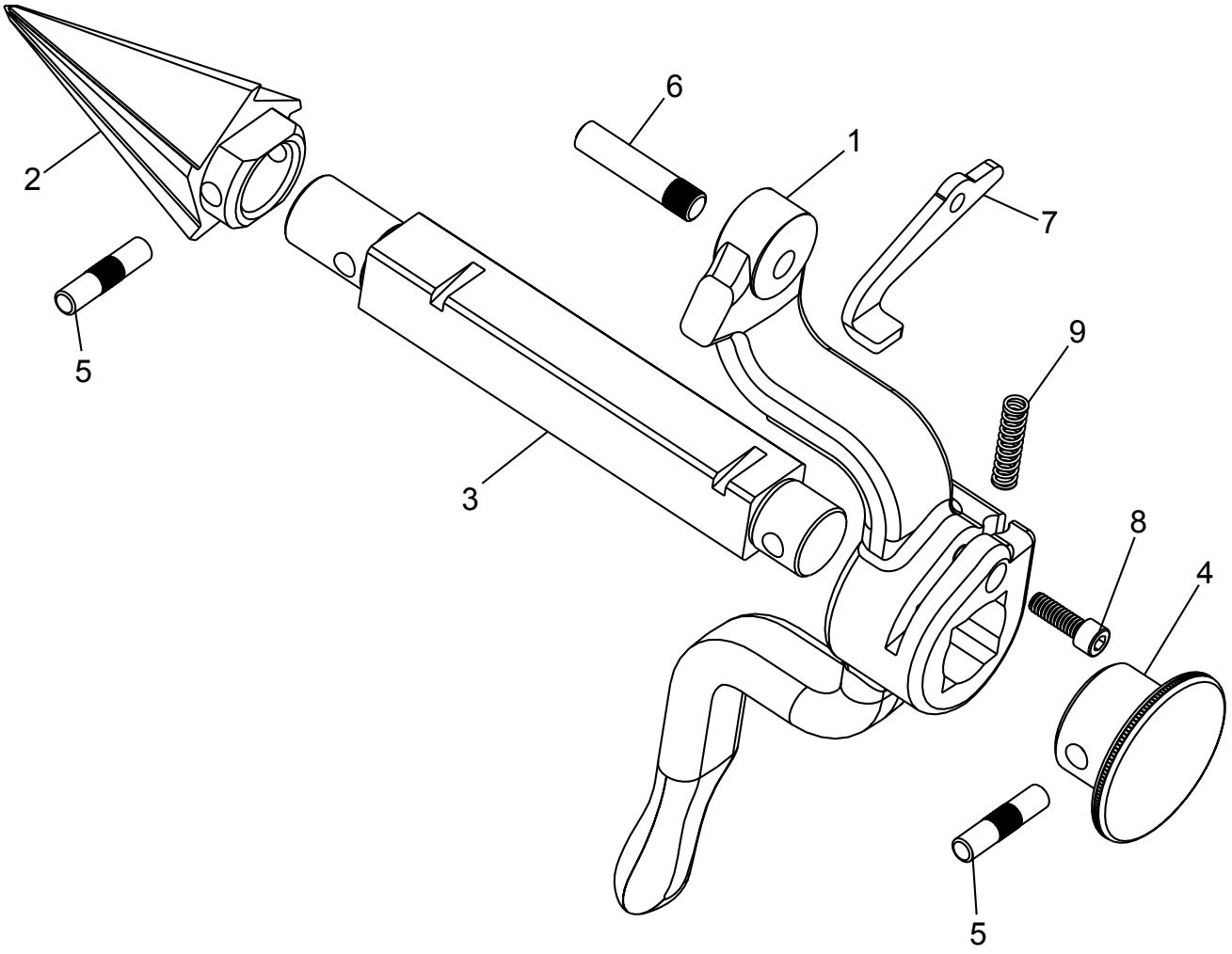

Parts List

Ref. No.	Description	Item Code	Qty. Used
1	Arm	95487	1
2	Reamer	95492	1
3	Bar	95493	1
4	Knob	95494	1
5	Pin	95495	2
6	Hinge Pin	95496	1
7	Latch	95497	1
8	1/4 x 3/4" Pin	30004	1
9	Spring	95451	1

CARRIAGE #05307
5301PD Carriage Adapter

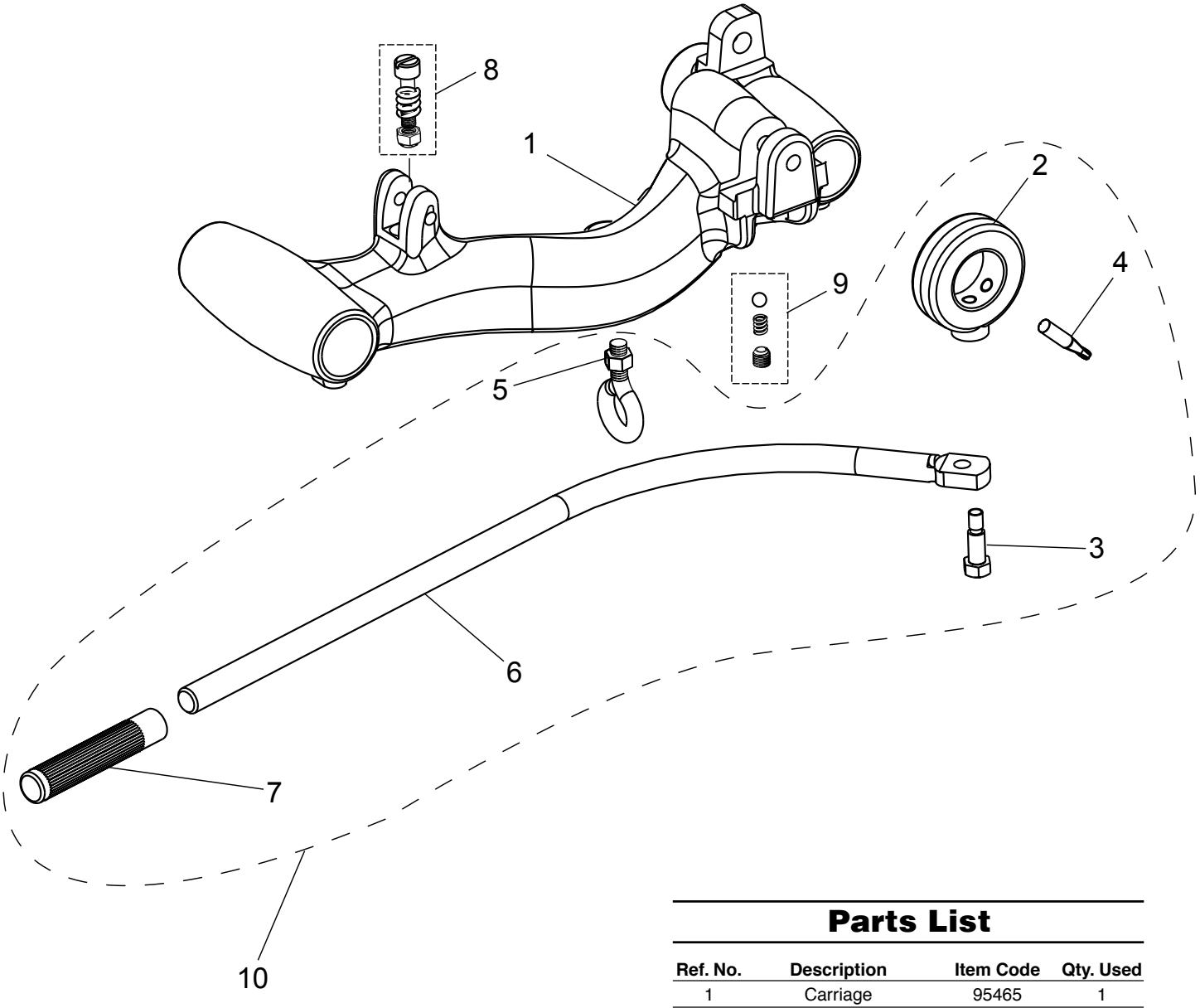

Parts List

Ref. No.	Description	Item Code	Qty. Used
1	Carriage	95465	1
2	Collar	95410	1
3	Shoulder Bolt	35424	1
4	Thumb Screw	35425	1
5	Eye Bolt	45550	1
6	Lever Arm	95551	1
7	Grip	92754	1
8	Stop Bolt Assembly	95881	1
9	Ball Retainer Kit	95883	1
10	Leverarm Kit	95885	1

5301PDTP #05305
5301PD Tripod

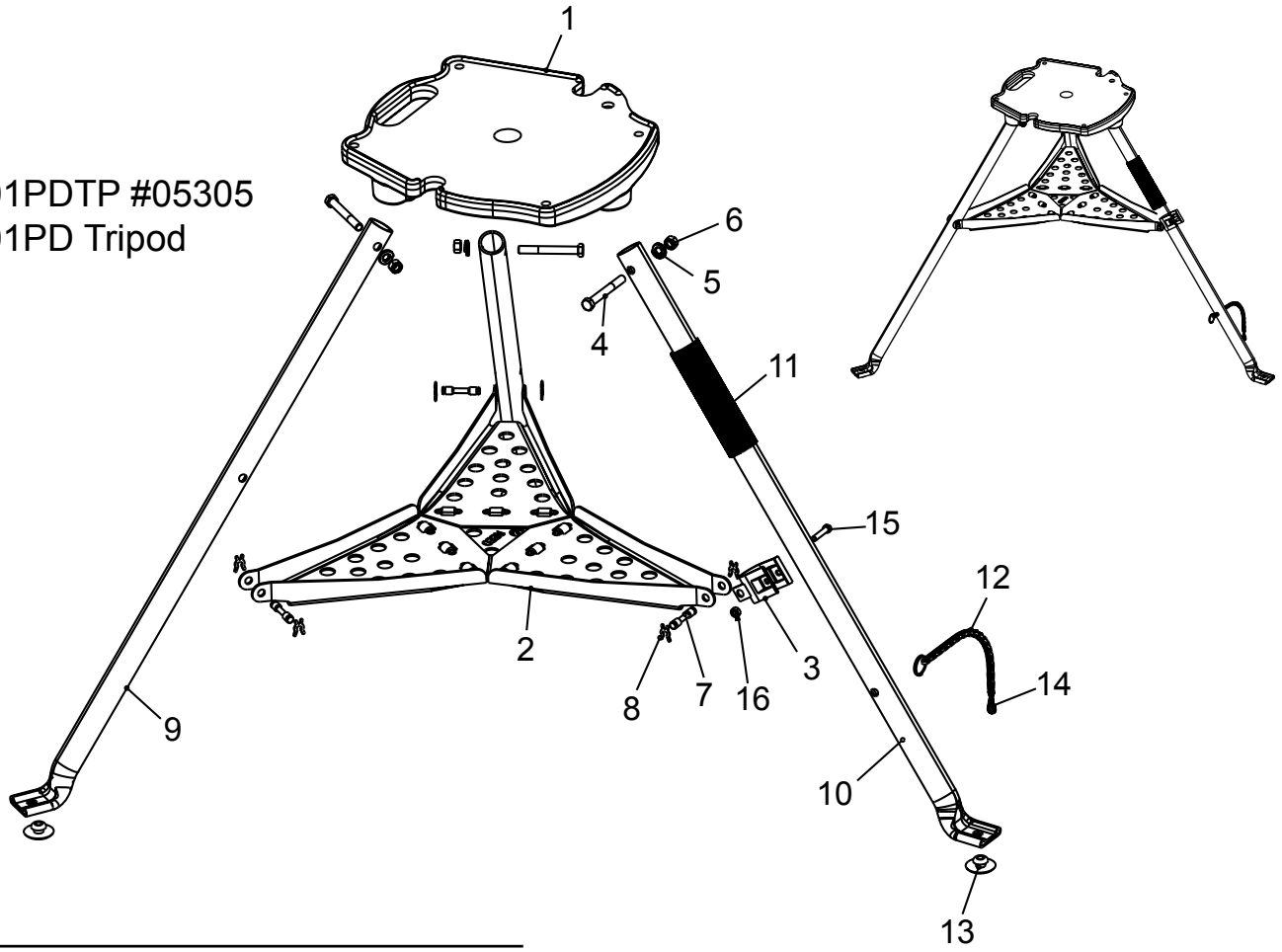

Parts List

Ref. No.	Description	Item Code	Qty. Used
1	5301PD Base	95398	1
2	Tray Assembly	99004	1
3	Tray Support Clamp	40194	1
4	Leg Bolt	30244	3
5	Nut	30032	3
6	Lock Washer	30033	3
7	Tray Pin	99008	6
8	X Washer	99010	2
9	Front Leg	45465	2
10	Rear Leg	45466	1
11	Handle Grip	40183	1
12	Leg Chain Assembly	99055	1
13	Grommet	40171	3
14	Clip	40205	1
15	Screw	39005	1
16	Nut	30123	1

#05306
5301PD Transporter

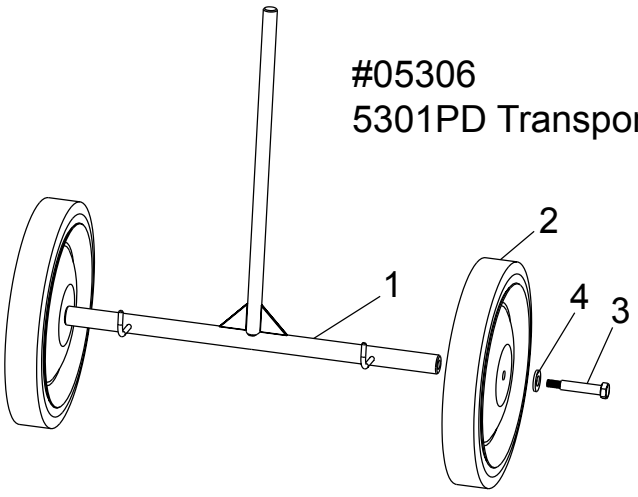

Parts List

Ref. No.	Description	Item Code	Qty. Used
1	Axle	95559	1
2	Semi-Pneumatic Wheel	95473	2
3	Hex Head Shoulder Screw	35448	2
4	1/2 x 1/8 Flat Washer	38845	2

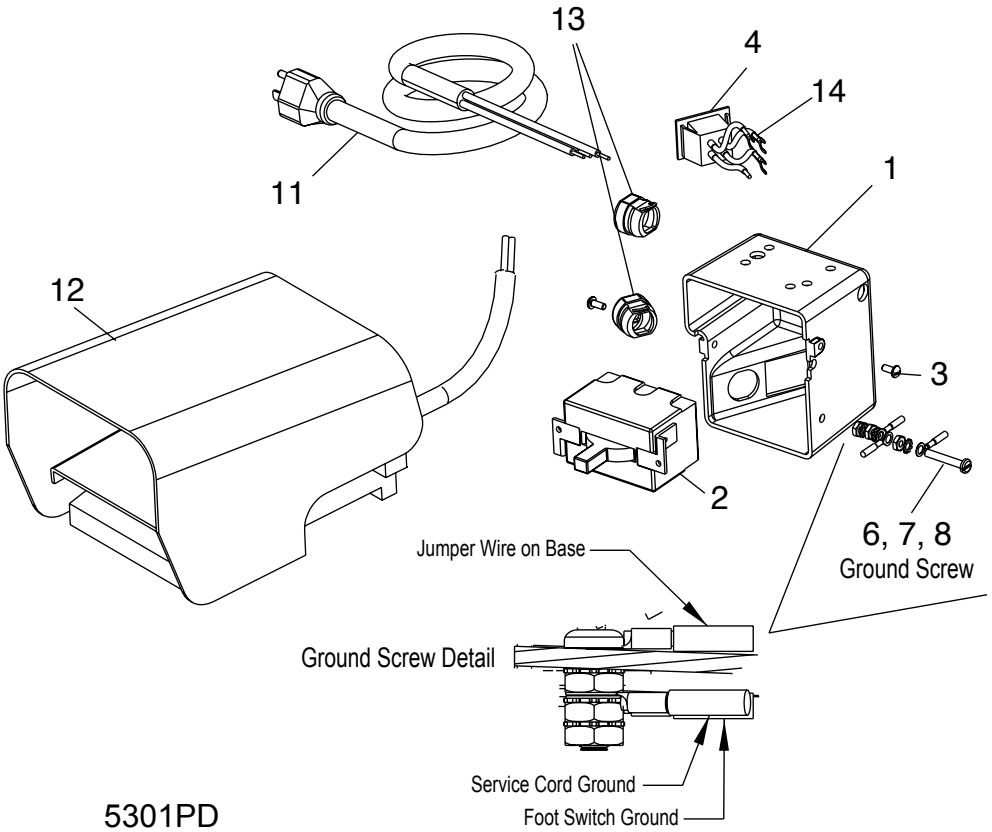

5301PD Electrical Assembly

Parts List

Ref. No.	Description	Item Code	Qty.	Ridgid #
1	SWITCH BOX	95430	1	—
2	SWITCH	95557	1	44505
3	SCREW	30106	2	—
4	OUTLET JUMPER ASSY.	95556	1	—
5	RING TONGUE TERMINAL	98859	3	—
6	SCREW (GROUND)	30159	1	—
7	LOCK WASHER	35423	3	46985 5/Pk
8	HEX NUT	30117	3	—
9	GROUND WIRE	95438	1	—
10	SCREW	35431	1	—
11	LINE CORD W/PLUG	95432	1	46740
12	FOOT SWITCH W/CORD	95574	1	36642
13	CORD GROMMET	95429	3	46735
14	SPADE TERMINAL	35436	4	—

RIDGID® is a registered trademark of RIDGID, Inc. and is not associated with Reed Manufacturing Company

5301PD Wiring Schematic

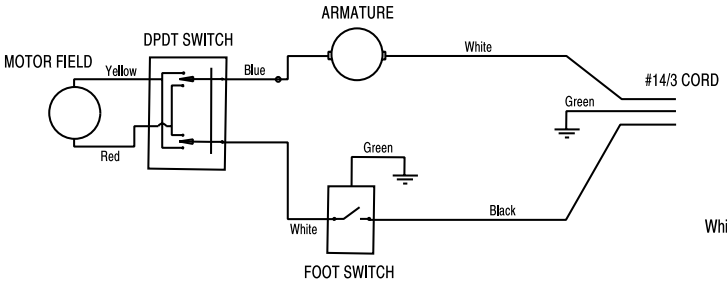

5301PD Wiring Diagram

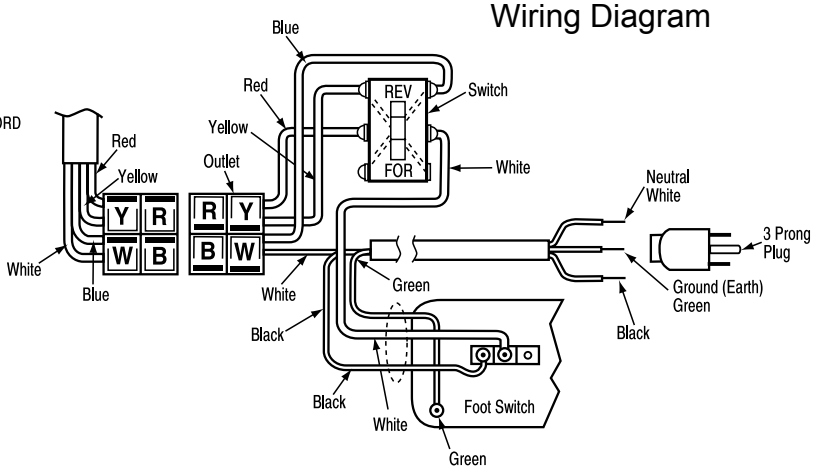

Reed Lifetime Warranty

Reed Hand Tools are for the professional trade and are warranted against all failure due to defects in workmanship and materials for the normal life of the tool.

FAILURES DUE TO MISUSE, ABUSE, OR NORMAL WEAR AND TEAR ARE NOT COVERED BY THIS WARRANTY.

Power units for Universal Pipe Cutters, Saw It®, electric test pumps, and threading power drives are warranted for a period of one year from date of purchase.

NO PARTY IS AUTHORIZED TO EXTEND ANY OTHER WARRANTY. NO WARRANTY FOR MERCHANTABILITY OR FITNESS FOR A PARTICULAR PURPOSE SHALL APPLY.

No warranty claims will be allowed unless the product in question is received freight prepaid at the Reed factory. All warranty claims are limited to repair or replacement, at the option of the company, at no charge to the customer. REED IS NOT LIABLE FOR ANY DAMAGE OF ANY SORT, INCLUDING INCIDENTAL AND CONSEQUENTIAL DAMAGES. Some states do not allow the exclusion or limitation of incidental or consequential damages, so the above exclusion may not apply.

This warranty gives you specific legal rights, and you may also have other rights which vary from state to state.