Heavy Duty Spring Retractable Hose Reels

Air/Water/Oil/Grease - 1/4", 3/8", 1/2" I.D.

Reelcraft's new compact dual pedestal Series DP5000 and DP7000 feature an innovative, non-welded, interlocking base. Independent testing to military standards has proven the reel stand up to heavy vibration, which makes them especially strong and ideal for truck-mounted applications. Superbly engineered dual pedestal base and guide arm are structurally reinforced. All-steel construction and a baked-on powder coat finish combine to produce a rugged corrosion-resistant product suitable for a wide variety of heavy duty applications.



DP5835 OLP

Made in USA



DP7850 OLP

Meets or exceeds military vibration for Truck Transport test

MIL-STD-810F

500,000 mile equivalent

✓Superior corrosion-resistance

A double adhesive gasket seals the spring case. Steel parts are powder coated to provide excellent protection against weathering.

✓Ease of operation

The latch pawl is mounted on the guide arm to prevent latch out at full extension. The high impact, nylon-filled guide rollers make retraction and pay out nearly effortless.

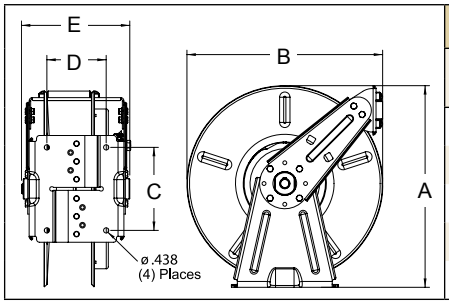

Dimensions - Size Index	1		2		3		4	
	in	mm	in	mm	in	mm	in	mm
A	16 3/8	416	16 3/8	416	17	432	17	432
B	14 3/8	365	14 3/8	365	16 1/2	419	16 1/2	419
C	7	178	7	178	7	178	7	178
D	4	102	5	127	4	102	5	127
E	8	203	9	229	8	203	9	229

Model with Hose	Shipping Weight		Hose I.D.		Hose O.D.		Hose Length		**Max Pressure		(M)NPTF Hose Outlet	(F)NPTF Reel Inlet	Model without hose & bumper	Shipping Weight		Pressure		Size Index #
	lbs	kg	in	mm	in	mm	ft	m	psi	bar	in	in		lbs	kg	psi	bar	
Low Pressure Air/Water Reels Maximum Temperature 150 °F (65 °C) w/hose / 210 °F (99 °C) w/o hose **Maximum working pressure at 70 °F (20 °C)																		
DP5435 OLP	34	15	1/4	6	.475	12	35	11	300	21	1/4	1/2	**DP5400 OLP**	29	13	500	35	1
DP5450 OLP	37	17	1/4	6	.475	12	50	15	300	21	1/4	1/2	**DP5400 OLP**	29	13	500	35	1
DP7450 OLP	46	21	1/4	6	.475	12	50	15	300	21	1/4	1/2	**DP7400 OLP**	44	20	500	35	3
DP5635 OLP	41	19	3/8	10	.600	15	35	11	300	21	1/4	1/2	**DP5600 OLP**	37	17	500	35	1
IN IN **DP5650 OLP**	44	20	3/8	10	.600	15	50	15	300	21	1/4	1/2	**DP5605 OLP**	38	17	500	35	2
IN IN **DP7650 OLP**	50	23	3/8	10	.600	15	50	15	300	21	1/4	1/2	**DP7600 OLP**	44	20	500	35	3
DP5835 OLP	52	24	1/2	13	.750	19	35	11	300	21	3/8	1/2	**DP5800 OLP**	38	17	500	35	2
CA IN IN **DP7850 OLP**	53	24	1/2	13	.750	19	50	15	300	21	3/8	1/2	**DP7800 OLP**	45	20	500	35	4
DP7850 OLP121	53	24	1/2	13	.750	19	50	15	300	21	1/2	1/2	**DP7800 OLP**	45	20	500	35	4
Medium Pressure Oil Reels Maximum Temperature 210 °F (99 °C)																		
DP7650 OMP	55	25	3/8	10	.690	18	50	15	2600	179	3/8	1/2	**DP7600 OMP**	45	20	3000	207	3
DP5835 OMP	54	24	1/2	13	.820	21	35	11	3250	224	1/2	1/2	**DP5800 OMP**	40	18	3250	224	2
IN IN **DP7850 OMP**	64	29	1/2	13	.820	21	50	15	3250	224	1/2	1/2	**DP7800 OMP**	45	20	3250	224	4
High Pressure Grease Reels Maximum Temperature 210 °F (99 °C)																		
DP7450 OHP	59	27	1/4	6	.580	15	50	15	5000	345	1/4	1/2	**DP7400 OHP**	44	20	5000	345	3
DP5635 OHP	43	20	3/8	10	.730	19	35	11	4800	331	3/8	1/2	**DP5600 OHP**	40	18	5000	345	2
CA **DP7650 OHP**	65	29	3/8	10	.730	19	50	15	4800	331	1/4	1/2	**DP7600 OHP**	46	21	5000	345	3

Low pressure reels furnished standard with PVC hose. Medium pressure reels furnished standard with S.A.E. 100 R1T one wire braid hose. High pressure reels furnished standard with S.A.E. 100 R2T two wire braid hose. Reference page 4 for guide arm positions.

Available Options

Mounting Brackets See page 47



Inlet Hose Assemblies See page 49



Replacement Bumpers See page 49



Replacement Hoses See page 50



Models listed with an icon can ship same day upon request when the order is received by 11:30 AM Eastern Time for quantities of 5 or fewer.

IN Indiana Warehouse | IN IN Indiana & California Warehouses | CA California Warehouse | Canadian Warehouse