Central Brass
COMPANY
Brecksville, Ohio 44141
Phone: (216) 883-0220 Fax: (440) 526-5745
www.CentralBrass.com

**MODEL NO. 0048-UA6**
**SINK FIXTURE**
**ADA COMPLIANT**

The wall mounted sink fitting is designed with a solid cast brass body with replaceable seats. The flanges are all brass and have 1/2-inch female pipe connections. The inlet supply location is adjustable by rotating the flange to obtain a 1/4-inch center variation. The 8-inch "D" shaped brass spout has a water saving aerator that limits the flow. The stems are all brass with a double O-Ring seal and rubber seat washer. The canopy handles are zinc die cast with a chrome plated finish. The faucet and flanges are polished and copper, nickel, and chrome plated. The soap dish and post are brass with a chrome plated finish.

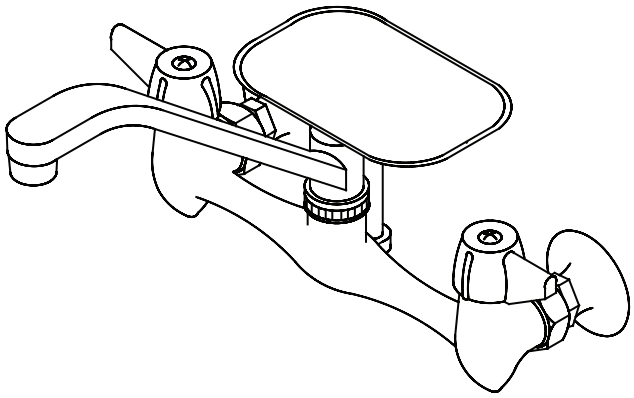

Flow Rate: 2.0 GPM @ 60 psi
ADA Compliant and Meets ASME A112.18.1M
ANSI/NSF 61/Section 9 Certified

NSF Certified to ANSI/NSF 61 Section9

## Installation Drawing

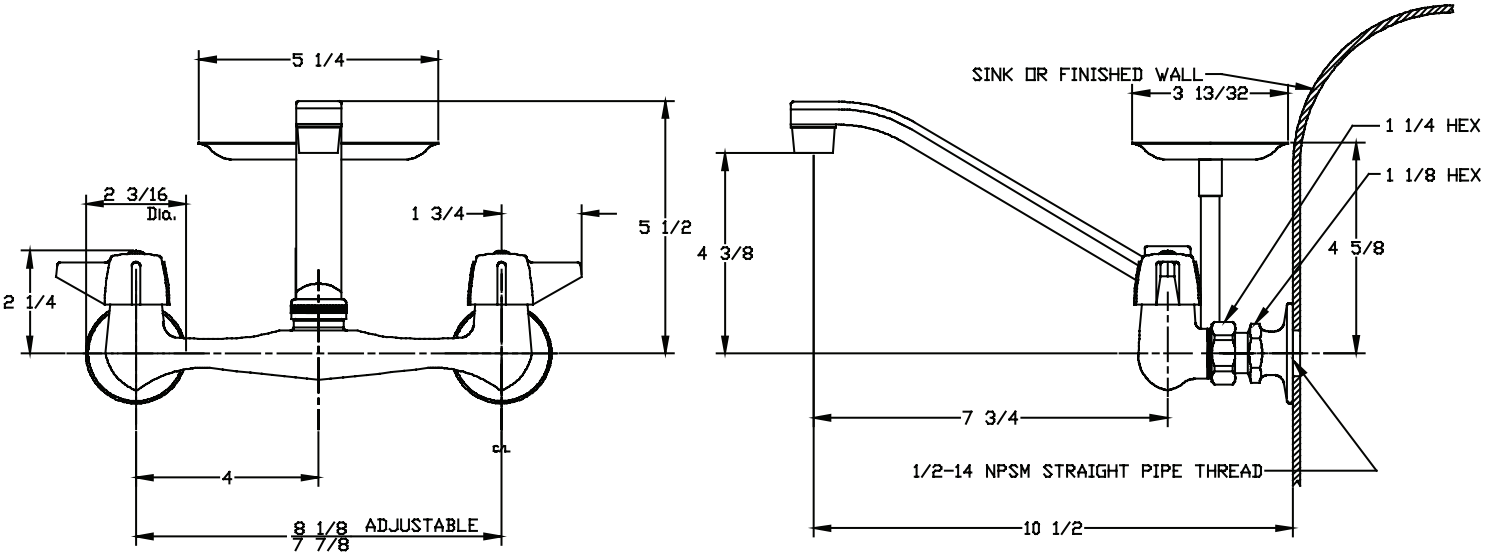


6-26-08