Central Brass
COMPANY

# INSTALLATION

**CENTRAL BRASS COMPANY**
1277 Heil Quaker Blvd.
La Vergne, TN 37086
(800) 321-8630
www.centralbrass.com

**Tools:**


Adjustable Wrench


Silicone Sealant


Teflon Tape


Rags



## Model Number: 0184-LE0, 0194-LE0

**Warnings and Notes:**
Check with local plumbing code requirements before installation.
This product should be installed by a local listed plumber.
**Do not use plumbers putty on threads.**

## Installation Steps:

Two Handle Wall Mount Faucet

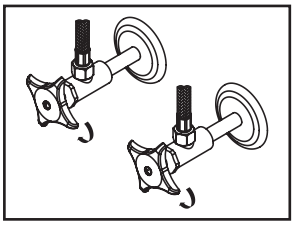

(1) Shut off water supplies. Remove old faucet. Clean mounting surface in preparation for new faucet.

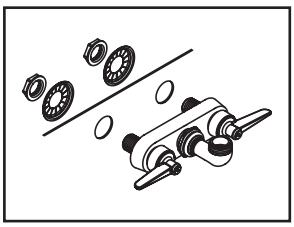

(2) Place faucet shank through mounting hole of backsplash, slide crowfoot washer through shank and secure faucet by tightening locknut from back of backsplash.

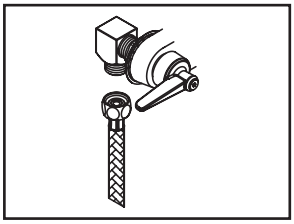

(3) Attach elbows or supply lines as needed.

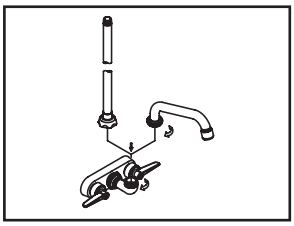

(4) Attach the chosen spout or pre-rinse units. For pre-rinse units please refer to the installation instruction which comes with pre-rinse unit.

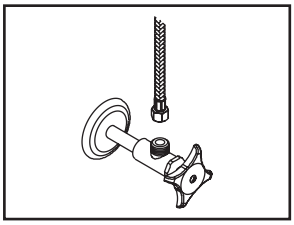

(5) Connect hot and cold inlet supply hoses to supply stops.

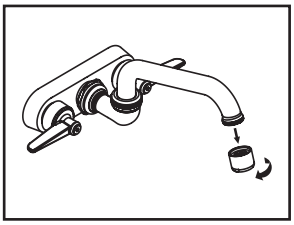

(6) Turn on water supplies, remove aerator and turn on both handles to allow hot & cold water to run at least one minute, check all connections for any leak. Turn off both handles and replace aerator.

## Exploded Drawing (0184-LE0):

| | ITEM # | DESCRIPTION |
|---|---|---|
| A | CS-19007C,H | Lever Handle-Cold,Hot |
| B | G-453-EL, ER | Cold, Hot Stem Assembly with Gasket |
| C | G-1748-88W | Swivel Spout Adapter |
| D | SU-2924-A | 6” Tube Spout with Aerator |
| 1 | CS-49033 | Handle Screw |
| 2 | X107-FB, FR | Index Blue, Red (5 pcs/pk) |
| 3 | X1028-Y | Gasket (25 pcs/pk) |
| 4 | X263-BC | Replacement Seat (10 pcs/pk) |
| 5 | X490-AP | Washer (12 pcs/pk) |
| 6 | X940-TRN | Washer (10 pcs/pk) |
| 7 | X54 | Crowfoot Washer (10 pcs/pk) |
| 8 | X7133-AZ | Locknut (10 pcs/pk) |
| 9 | CS-49014 | 1.5 GPM Aerator |

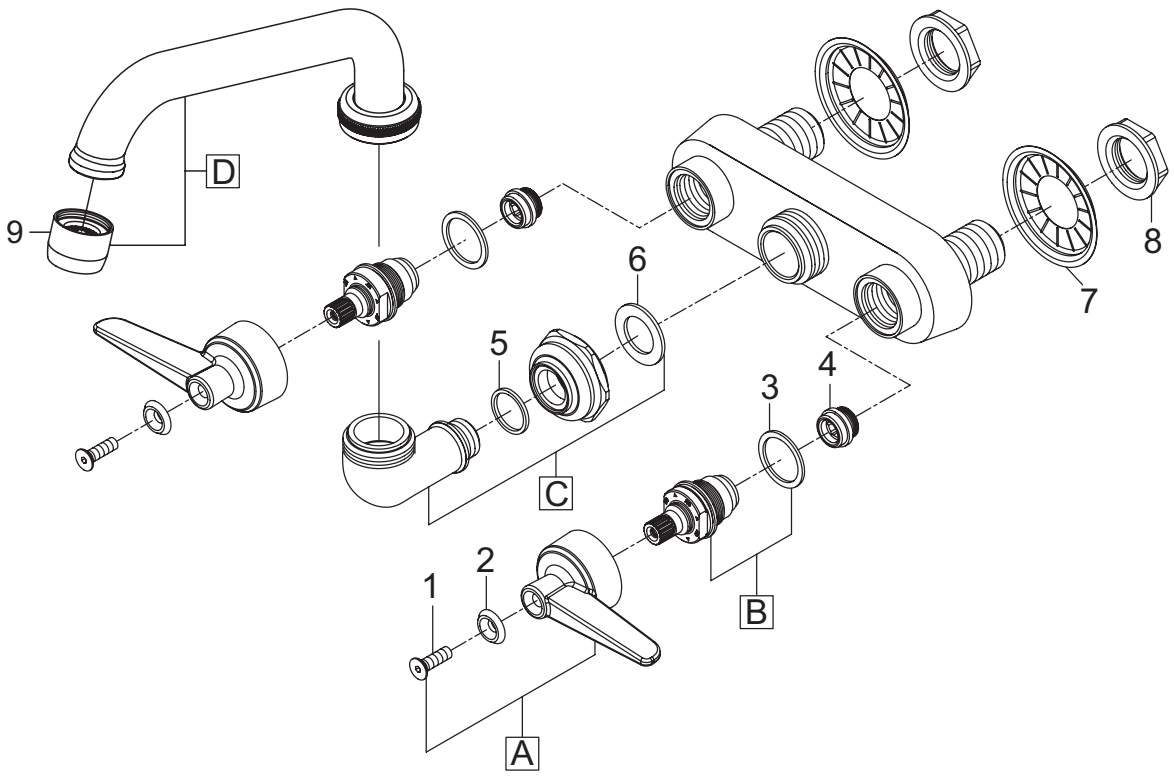


Central Brass
COMPANY

For more care information or trouble shooting inquiries about
your Central Brass product, please call:
**Central Brass Company** (800) 321-8630
Monday-Friday 8AM to 8PM EST (5AM to 5PM PST)
www.centralbrass.com

## Exploded Drawing (0194-LE0):

| | ITEM # | DESCRIPTION |
|---|---|---|
| A | CS-19007C,H | Lever Handle-Cold,Hot |
| B | G-453-EL, ER | Cold, Hot Stem Assembly with Gasket |
| C | G-392 | Deck Plate and Gasket |
| D | G-1748-88W | Swivel Spout Adapter |
| E | SU-2924-A | 6” Tube Spout with Aerator |
| 1 | CS-49033 | Handle Screw |
| 2 | X107-FB, FR | Index Blue, Red (5 pcs/pk) |
| 3 | X1028-Y | Gasket (25 pcs/pk) |
| 4 | X263-BC | Replacement Seat (10 pcs/pk) |
| 5 | X490-AP | Washer (12 pcs/pk) |
| 6 | X940-TRN | Washer (10 pcs/pk) |
| 7 | 392-G | Gasket |
| 8 | X54 | Crowfoot Washer (10 pcs/pk) |
| 9 | X7133-AZ | Locknut (10 pcs/pk) |
| 10 | CS-49014 | 1.5 GPM Aerator |

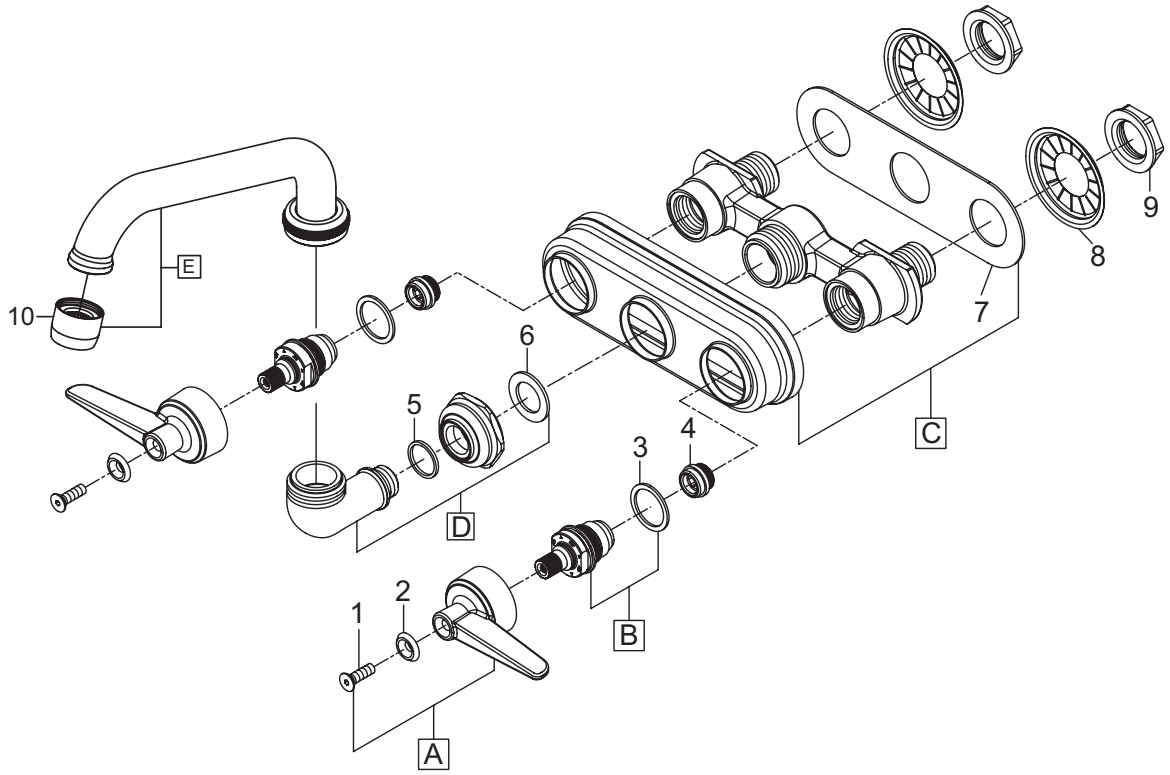


Central Brass
COMPANY

For more care information or trouble shooting inquiries about
your Central Brass product, please call:
**Central Brass Company** (800) 321-8630
Monday-Friday 8AM to 8PM EST (5AM to 5PM PST)
www.centralbrass.com

# Central Brass Company, Inc. Limited Lifetime Warranty

**Central Brass Company, Inc.** warrants its products to the original consumer purchaser to be free from defects in material and workmanship as long as the consumer purchaser owns it. Dated proof of purchase must accompany all warranty claims. All finishes carry a lifetime warranty in residential and 10 year warranty in commercial plumbing service as long as the consumer purchaser owns it.

If the faucet should ever develop a leak or drip during warranty period, Central Brass Company, Inc. will free of charge provide the parts necessary to put the faucet back in good working condition and will replace any part or finish proven defective under normal installation, use, and service to the original consumer purchaser. Damage as a result of misuse, abuse, accident, or improper installation, will consequently void this warranty. Use of non-genuine Central Brass parts will consequently void this warranty. Replacement parts can be obtained from your local dealer or directly from Central Brass. Central Brass recommends using a certified plumber for all faucet installation and repair.

This warranty is limited to replacement of defective parts only. Incidental and consequential damages, labor charges, repair, or replacement costs are expressly excluded. Some states do not allow the exclusion or limitation in incidental or consequential damages, so the above limitation may not apply to you. This warranty gives you specific legal rights, as you may have other rights which vary from state to state.
Installation or maintenance and cleaning must be in compliance with instructions furnished with every Central Brass product. If you find a problem with your product, please immediately contact your nearest Central Brass Company, Inc. dealer or sales representative.

*10-year limited warranty on commercial and multi-family projects except for products specified below. Effective for products sold after 07/01/2017

Sensor Faucets: - The mechanics of the Central Brass Sensor Faucets are warranted for five (5) years from the date of installation. The electronics and solenoid are warranted for a period of one (1) year from the date of installation.

Pre-Rinse:- The mechanics of the Central Brass Pre-rinse Spray valve are warranted for five (5) years from the original date of purchase.

## MAINTENANCE AND CARE INSTRUCTIONS

Use clean water to clean the surface of the faucet and dry with a 100% cotton cloth. If water is allowed to evaporate on the faucet surface can lead to build up of mineral deposits. Cleaning with a damp non-abrasive sponge and buffing it dry with a clean soft cloth should help keep product looking beautiful. To remove water spots, use warm water and a soft, damp cloth. Hard water stains may be removed using a 50/50 solution of white vinegar and water. Making sure that to rinse thoroughly with water afterward. As cleaner manufacturers may change their formulations at any time, therefore we do not recommend any specific cleaner.

**Avoid using the following which can damage product finish**:

- Avoid industrial cleaners and abrasive cleaners, such as those used for toilet bowls, green Scotch-Brite heavy duty scrub sponges, Scrubbing Bubbles Bathroom Cleaner and Lysol Basin Tub, Soft Scrub, and Tile Cleaner.
- Avoid products that state on the label that they remove tarnish and rust, and those containing hydrofluoric, hydrochloric and/or phosphoric acids and caustic agents.
- Avoid harsh abrasives or polishes
- Avoid bleach-based cleaners

**Attention California Residents:**

"WARNING: This product contains chemicals known to the State of California to cause cancer, and birth defects or other reproductive harm."

Central Brass
COMPANY, Inc.

For more care information or trouble shooting inquiries about your Central Brass product, please call: **Central Brass Company, Inc.** (800) 321-8630
Monday-Friday 8 AM to 8 PM EST (5 AM to 5 PM PST)
www.centralbrass.com

CBS042