# Stainless Steel Take-Up

## SHCST 200 PTI Series

### Stainless Steel Normal Duty Bearing
### Eccentric Lock
### Metric and Inch Bores




Housing:
AISI 304 Stainless
Grease Fitting: AISI 304

Bearing Insert:
Inner & Outer Race: AISI 440C Stainless
Cage & Set Screw: AISI 302 Stainless
Balls: AISI 440C Stainless
Seals: Rubber & AISI 302 Stainless
Grease: Mobil FM222, NSF H-1 Food Grade
Collar: AISI 304 Stainless

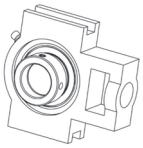

Models Available

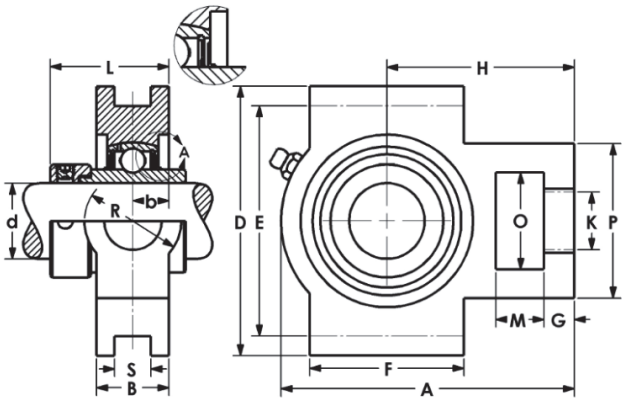


| Part No. | Shaft Size d | | Dimensions (mm) (in) | | | | | | | | | | | | | | | Bearing No. | Housing No. | Wt. kg |
|---|---|---|---|---|---|---|---|---|---|---|---|---|---|---|---|---|---|---|---|---|
| | mm | in | A | B | b | D | E | F | G | H | K | L | M | O | P | R | S | | | |
| SHCST201-8 | | 1/2 | 94 | 21 | 10.5 | 89 | 76 | 51 | 10 | 61 | 19 | 37.1 | 16 | 32 | 51 | 32 | 12 | SHC201-8 | | |
| SHCST202-10 | | 5/8 | 3.70 | 0.83 | 0.41 | 3.50 | 2.99 | 2.01 | 0.39 | 2.40 | 0.75 | 1.46 | 0.63 | 1.26 | 2.01 | 1.26 | 0.47 | SHC202-10 | ST204 | 1.0 |
| SHCST204-20MM | 20 | | 94 | 21 | 10.5 | 89 | 76 | 51 | 10 | 61 | 19 | 37.1 | 16 | 32 | 51 | 32 | 12 | SHC204-20MM | | |
| SHCST204-12 | | 3/4 | 3.70 | 0.83 | 0.41 | 3.50 | 2.99 | 2.01 | 0.39 | 2.40 | 0.75 | 1.46 | 0.63 | 1.26 | 2.01 | 1.26 | 0.47 | SHC204-12 | | |
| SHCST205-25MM | 25 | | 97 | 24 | 12 | 89 | 76 | 51 | 10 | 62 | 19 | 3.89 | 16 | 32 | 51 | 32 | 12 | SHC205-25MM | | |
| SHCST205-14 | | 7/8 | 3.82 | 0.94 | 0.47 | 3.50 | 2.99 | 2.01 | 0.39 | 2.44 | 0.75 | 0.15 | 0.63 | 1.26 | 2.01 | 1.26 | 0.47 | SHC205-14 | ST205 | 1.2 |
| SHCST205-15 | | 15/16 | | | | | | | | | | | | | | | | SHC205-15 | | |
| SHCST205-16 | | 1 | | | | | | | | | | | | | | | | SHC205-16 | | |
| SHCST206-30MM | 30 | | 113 | 28 | 14 | 102 | 89 | 57 | 10 | 70 | 22 | 44.1 | 16 | 37 | 56 | 37 | 12 | SHC206-30MM | | |
| SHCST206-18 | | 1-1/8 | 4.45 | 1.10 | 0.55 | 4.02 | 3.50 | 2.24 | 0.39 | 2.76 | 0.87 | 1.74 | 0.63 | 1.46 | 2.20 | 1.46 | 0.47 | SHC206-18 | ST206 | 1.8 |
| SHCST206-19 | | 1-3/16 | | | | | | | | | | | | | | | | SHC206-19 | | |
| SHCST206-20 | | 1-1/4 | | | | | | | | | | | | | | | | SHC206-20 | | |
| SHCST207-35MM | 35 | | 130 | 30 | 15 | 102 | 89 | 64 | 14 | 78 | 22 | 47.3 | 16 | 37 | 64 | 37 | 12 | SHC207-35MM | | |
| SHCST207-20 | | 1-1/4 | 5.12 | 1.18 | 0.59 | 4.02 | 3.50 | 2.52 | 0.55 | 3.07 | 0.87 | 1.86 | 0.63 | 1.46 | 2.52 | 1.46 | 0.47 | SHC207-20 | ST207 ST207WS * | 2.2 |
| SHCST207-22 | | 1-3/8 | | | | | | | | | | | | | | | | SHC207-22 | | |
| SHCST207-23 | | 1-7/16 | | | | | | | | | | | | | | | | SHC207-23 | | |
| SHCST208-40MM | 40 | | 144 | 33 | 16.5 | 114 | 102 | 83 | 16 | 88 | 29 | 51.4 | 19 | 49 | 83 | 49 | 16 | SHC208-40MM | ST208 | 2.6 |
| SHCST208-24 | | 1-1/2 | 5.67 | 1.30 | 0.65 | 4.49 | 4.02 | 3.27 | 0.63 | 3.46 | 1.14 | 2.02 | 0.75 | 1.93 | 3.27 | 1.93 | 0.63 | SHC208-24 | | |
| SHCST209-45MM | 45 | | 144 | 35 | 17.5 | 117 | 102 | 83 | 16 | 87 | 29 | 53.9 | 19 | 49 | 83 | 49 | 16 | SHC209-45MM | | |
| SHCST209-27 | | 1-11/16 | 5.67 | 1.38 | 0.69 | 4.60 | 4.02 | 3.27 | 0.63 | 3.43 | 1.14 | 2.12 | 0.75 | 1.93 | 3.27 | 1.93 | 0.63 | SHC209-27 | ST209 | 2.7 |
| SHCST209-28 | | 1-3/8 | | | | | | | | | | | | | | | | SHCST209-28 | | |
| SHCST210-50MM | 50 | | 149 | 37 | 18.5 | 117 | 102 | 86 | 16 | 90 | 29 | 57 | 19 | 49 | 83 | 49 | 16 | SUC210-50MM | | |
| SHCST210-31 | | 1-15/16 | 5.86 | 1.46 | 0.73 | 4.60 | 4.02 | 3.38 | 0.63 | 3.54 | 1.14 | 2.24 | 0.75 | 1.93 | 3.27 | 1.93 | 0.63 | SUC210-31 | ST210 | 2.8 |
| SHCST210-32 | | 2 | | | | | | | | | | | | | | | | SUC210-32 | | |

Note: *Wide Slot unit also available from stock for size 207, with slot width of 13.5MM.