Thermoplastic Take-Up Units

SUCTT 200 PTI Series

Stainless Steel Normal Duty Bearing
PBT Thermoplastic Housing
Set Screw Lock
Metric and Inch Bores
Narrow Slot





PBT Black Housing available



Open and Closed End Covers Optional

Housing:

- Material: Reinforced PBT (polybutylene terephthalate)
- Working Temperatures: -10°F to 210°F
- Interchanges with standard housing dimensions
- Sleeves and bushings are stainless steel
- Smooth housing designed for washdown
- Excellent chemical resistance
- Grease Fitting: AISI 304

Bearing Insert:

- Inner & Outer Race: AISI 440C Stainless
- Cage & Set Screw: AISI 302 Stainless
- Balls: AISI 440C Stainless
- Seals: Rubber & AISI 302 Stainless
- Grease: Mobil FM222 NSF H-1 Food Grade



Models Available

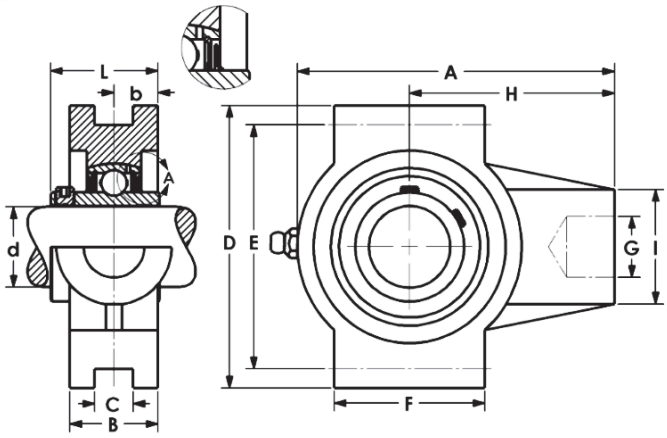

Part No.	Shaft Size d		Dimensions (mm) (in)											Bearing No.	Housing No. **	Wt. kg
	mm	in	A	B	b	C **	D	E	F	G*	H	I	L			
SUCTT201-8		1/2	99	24	12.7	12	88	76	47	—	64	36	31	SUC201-8	TT204 (TT204BLK)	0.30
SUCTT202-10		5/8	3.90	0.94	0.50	0.47	3.46	2.99	1.85	1/2-13	2.52	1.42	1.22	SUC202-10		
SUCTT204-20MM	20		99	27.5	12.7	12	88	76	47	—	64	36	31	SUC204-20MM	TT204 (TT204BLK)	0.40
SUCTT204-12		3/4	3.90	1.08	0.50	0.47	3.46	2.99	1.85	1/2-13	2.52	1.42	1.22	SUC204-12		
SUCTT205-25MM	25		101.5	27.5	14.3	12	88	76	46.5	—	64	35	34.1	SUC205-25MM	TT205 (TT205BLK)	0.35
SUCTT205-14		7/8	4.00	1.08	0.56	0.47	3.46	2.99	1.83	1/2-13	2.52	1.38	1.34	SUC205-14		
SUCTT205-15		15/16												SUC205-15		
SUCTT205-16		1												SUC205-16		
SUCTT206-30MM	30		125	34.5	15.9	12	102	89	63	—	76	40	38.1	SUC206-30MM	TT206 (TT206BLK)	0.65
SUCTT206-18		1-1/8	4.92	1.36	0.63	0.47	4.02	3.50	2.48	5/8-11	2.99	1.57	1.50	SUC206-18		
SUCTT206-19		1-3/16												SUC206-19		
SUCTT206-20		1-1/4												SUC206-20		
SUCTT207-35MM	35		125	34.5	17.5	12	102	89	63	—	76	40	42.9	SUC207-35MM	TT207 (TT207BLK)	0.50
SUCTT207-20		1-1/4	4.92	1.36	0.69	0.47	4.02	3.50	2.48	5/8-11	2.99	1.57	1.69	SUC207-20		
SUCTT207-22		1-3/8												SUC207-22		
SUCTT207-23		1-7/16												SUC207-23		
SUCTT208-40MM	40		140	34.5	17.5	16	114	102	80	—	85	40	47.5	SUC208-40MM	TT208 (TT208BLK)	0.65
SUCTT208-24		1-1/2	5.51	1.36	0.69	0.63	4.49	4.02	3.15	5/8-11	3.35	1.57	1.87	SUC208-24		

Note: Threaded Insert (G dimension) stocked only in inch threads. ** Wide Slot optional. Larger sizes on request. For Black Housing include BLK as suffix. Example: SUCTT204-12BLK.