GUK Type Lock Nuts

Self-Locking nut
Polyamide Insert
Metric ISO fine thread

Self-locking by the Polyamide Insert - temperature max: 100°C / 212°F
The bore of the threadless Polyamide Insert is slightly smaller than the inner diameter of the nut, therefore increasing friction between nut and shaft for locking.
Zinc Plated and passivated finish.



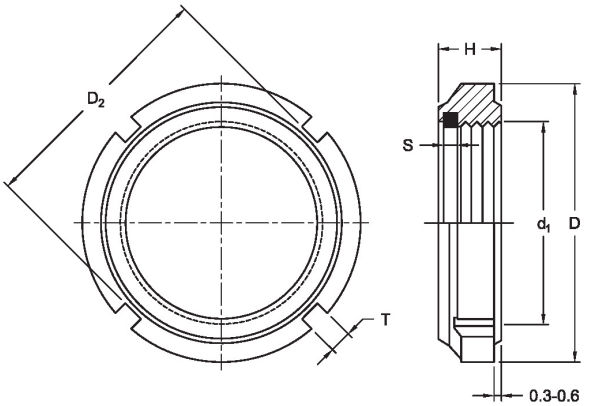

Models Available

Dimensions in **mm**

Part No.	Thread d_1	D	D_2	H	T	S	Nut Grooves	Wt. kg/100 pcs
GUK0	M10 x 0.75	18	15	7.6	3	1.5	4	0.6
GUK1	M12 x 1	21	18	7.6	3	1.5	4	0.9
GUK2	M15 x 1	24	21	8.6	4	1.5	4	1.4
GUK3	M17 x 1	28	24	8.7	4	2.0	4	1.7
GUK4	M20 x 1	32	27	9.6	4	2.5	4	2.3
GUK5	M25 x 1.5	38	33	10.5	5	2.5	4	3.1
GUK6	M30 x 1.5	44	38	10.7	5	3.0	4	4.6
GUK7	M35 x 1.5	50	44	11.3	5	3.0	4	6.0
GUK8	M40 x 1.5	56	50	12.3	6	3.0	4	7.5
GUK9	M45 x 1.5	62	55	12.3	6	3.5	4	9.3
GUK10	M50 x 1.5	68	61	12.9	6	3.5	4	11.3
GUK11	M55 x 2	75	68	13.4	7	3.5	6	14.6
GUK12	M60 x 2	80	73	13.4	7	3.5	6	15.9
GUK13	M65 x 2	85	77	14.5	7	4.0	6	19.0
GUK14	M70 x 2	92	84	14.5	8	4.0	6	22.1
GUK15	M75 x 2	98	89	15.5	8	4.5	6	26.1
GUK16	M80 x 2	105	96	16.5	8	4.0	8	32.1
GUK17	M85 x 2	110	100	17.5	8	5.0	8	37.1
GUK18	M90 x 2	120	110	17.7	10	5.0	8	46.6
GUK19	M95 x 2	125	115	18.7	10	5.0	8	51.6
GUK20	M100 x 2	130	120	19.7	10	5.0	8	59.6