Medium Duty Wide Slot Take-Up

WSX X00 PTI Series

Medium Duty Bearing
Cast Iron Housing
Set Screw Lock
Metric and Inch Bores



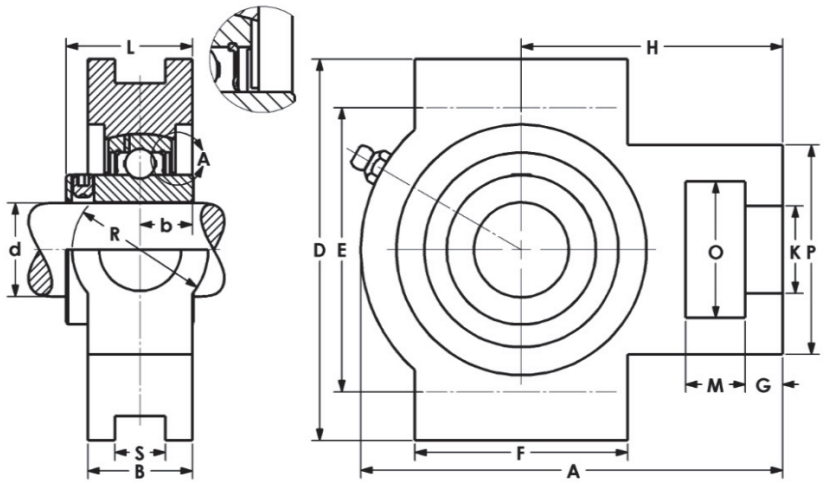

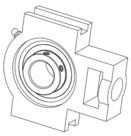

Models Available

Part No.	Shaft Size d		Dimensions (mm) (in)															Bearing No.	Housing No.	Wt. kg
	mm	in	A	B	b	D	E	F	G	H	K	L	M	O	P	R	S			
WSX05-25MM	25		113	28	16	102	89	57	10	70	22	34.2	16	36.5	56	56	13.5	UCX05-25MM	WS206	1.4
WSX05-16		1	4.45	1.10	0.63	4.02	3.50	2.24	0.39	2.76	0.87	1.35	0.63	1.44	2.20	2.20	0.53	UCX05-16		
WSX06-30MM	30		129	30	17.5	102	89	63.5	13	78	22	40.4	16	36.5	64	64	13.5	UCX06-30MM	WS207	2.1
WSX06-18		1-1/8	5.08	1.18	0.69	4.02	3.50	2.50	0.51	3.07	0.87	1.59	0.63	1.44	2.52	2.52	0.53	UCX06-18		
WSX06-19		1-3/16																UCX06-19		
WSX06-20		1-1/4																UCX06-20		
WSX07-35MM	35		144	36	19	114.3	102	82.5	15	89	29	47.6	19	49	83	83	17.5	UCX07-35MM	WS208	2.4
WSX07-20		1-1/4	5.67	1.42	0.75	4.50	4.02	3.25	0.59	3.50	1.14	1.87	0.75	1.93	3.27	3.27	0.69	UCX07-20		
WSX07-23		1-7/16																UCX07-23		
WSX08-40MM	40		144	38	19	117	102	82.5	15	87	29	47.6	19	49	83	83	17.5	UCX08-40MM	WS209	2.9
WSX08-24		1-1/2	5.67	1.50	0.75	4.61	4.02	3.25	0.59	3.43	1.14	1.87	0.75	1.93	3.27	3.27	0.69	UCX08-24		
WSX09-45MM	45		149	38	19	117	102	85.7	16	90	29	50.0	19	49	83	83	17.5	UCX09-45MM	WS210	3.4
WSX09-27		1-11/16	5.87	1.50	0.75	4.61	4.02	3.37	0.63	3.54	1.14	1.97	0.75	1.93	3.27	3.27	0.69	UCX09-27		
WSX09-28		1-3/4																UCX09-28		
WSX10-50MM	50		171	42	22	146	130	95	19	106	35	53.7	25.4	63.5	102	102	27	UCX10-50MM	WS211	4.2
WSX10-31		1-15/16	6.73	1.65	0.87	5.75	5.12	3.74	0.75	4.17	1.38	2.11	1.00	2.50	4.02	4.02	1.06	UCX10-31		
WSX10-32		2																UCX10-32		
WSX11-55MM	55		194	42	25	146	130	102	19	119	35	62.7	32	63.5	102	102	27	UCX11-55MM	WS212	7.1
WSX11-35		2-3/16	7.64	1.65	0.98	5.75	5.12	4.02	0.75	4.69	1.38	2.47	1.26	2.50	4.02	4.02	1.06	UCX11-35		
WSX11-36		2-1/4																UCX11-36		

Note: Larger sizes on request.