Ball Bearing Inserts and Accessories

GSH PTI Series

Thin Sleeve Adapter Lock
Normal Duty
Metric and Inch Bores
Steel Cage

The GSH Insert interchanges with the UC, HC and CL Insert sizes within the same housing and shaft size. The UK Series Housing, also an Adapter Mount, requires the next larger housing size for the same shaft size.



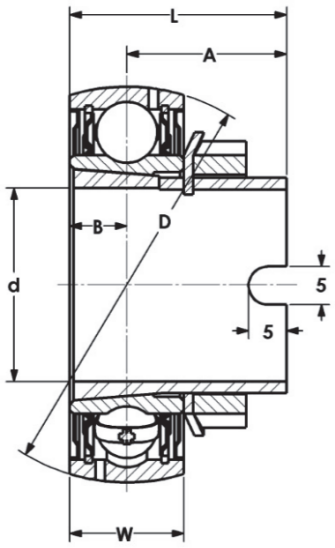

Bearing Assembly Part No.	Bearing Only Part No.	Adapter Part No.	Shaft Size d		Dimensions (mm) (in)					Basic Load Ratings		Max rpm	Wt. kg
			mm	in	A	B	D	L	W	Dynamic C N $1b_f$	Static C_o N $1b_f$		
GSH204-20MM	GSH204	H204GSH-20MM	20		18.9	7.5	47	28	14	12700	6600	6250	0.14
GSH204-12		H204GSH-12		3/4	0.75	0.30	1.850	1.10	0.55	2860	1490		
GSH205-25MM		H205GSH-25MM	25		17	7.5	52	28	15	13600	7800		
GSH205-15	GSH205	H205GSH-15		15/16	0.67	0.30	2.047	1.10	0.59	3060	1760	5300	0.17
GSH205-16		H205GSH-16		1									
GSH206-30MM		H206GSH-30mm	30		22.7	9	62	32	18	18900	11300		
GSH206-19	GSH206	H206GSH-19		1-3/16	0.89	0.35	2.441	1.26	0.71	4260	2550	4500	0.27
GSH206-20		H206GSH-20		1-1/4									
GSH207-35MM		H207GSH-35MM	35		24.6	9.5	72	34	19	24900	15300		
GSH207-20	GSH207	H207GSH-20		1-1/4	0.97	0.37	2.895	1.34	0.75	5610	3450	4000	0.43
GSH207-22		H207GSH-22		1-3/8									
GSH208-40MM	GSH208	H208GSH-40MM	40		27.9	11	80	38	21	29500	19800	3700	0.54
GSH208-24		H208GSH-24		1-1/2	1.10	0.43	3.150	1.50	0.83	6650	4460		
GSH209-45MM	GSH209	H209GSH-45MM	45		27.6	11	85	38	22	32000	19900	3400	0.54
GSH209-28		H209GSH-28		1-3/4	1.09	0.43	3.347	1.50	0.87	7210	4485		
GSH210-50MM		H210GSH-50MM	50		26.4	11	90	40	22	33000	19900		
GSH210-31	GSH210	H210GSH-31		1-15/16	1.04	0.43	3.543	1.57	0.87	7430	4485	3100	0.54
GSH210-32		H210GSH-32		2									

Note: Bearing Assembled with Adapter Sleeve, Lockwasher and Nut.