Pillow Block

VAK 200 PTI Series

Normal Duty Bearing
Cast Iron Housing
Eccentric Collar Lock
Metric and Inch Bores

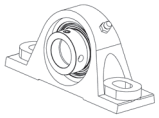

Models Available



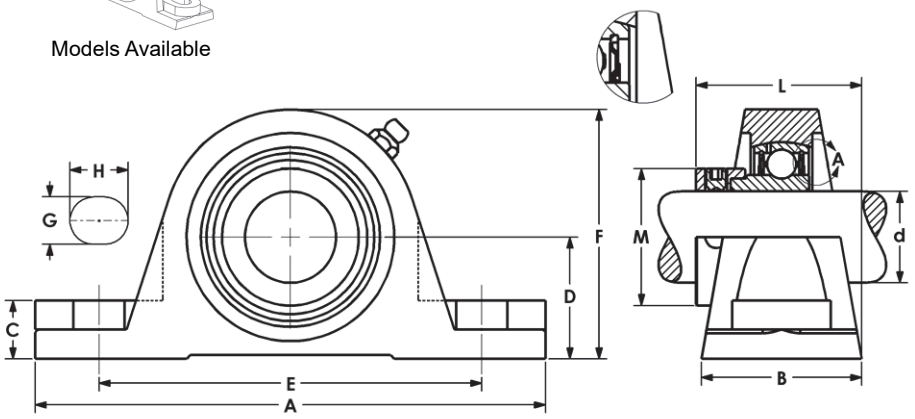

Part No.	Shaft Size d		Dimensions (mm) (in)										Bearing No.	Housing No.	Wt. kg
	mm	in	A	B	C	D	E	F	G	H	L	M			
VAK201-12MM	12		120	35	12.7	27	89	54	13	16	40.1	28.6	SA201-12MM		
VAK202-15MM	15												SA202-15MM		
VAK203-17MM	17												SA203-17MM	RAK203	0.5
VAK201-8		1/2	4.72	1.38	0.5	1.062	3.5	2.13	0.51	0.63	1.58	1.13	SA201-8		
VAK202-10		5/8											SA202-10		
VAK203-11		11/16											SA203-11		
VAK204-20MM	20		133	41	14.3	31.75	98	63.5	13	16	44.5	33.3	SA204-20MM	RAK20	0.6
VAK204-12		3/4	5.25	1.61	0.56	1.250	3.86	2.50	0.51	0.63	1.75	1.31	SA204-12		
VAK205-25MM	25		140	44	16	33.34	105	68.3	11.7	16	45.5	38.1	SA205-25MM		
VAK205-14		7/8	5.50	1.73	0.63	1.312	4.13	2.69	0.46	0.63	1.79	1.50	SA205-14	RAK25	0.8
VAK205-15		15/16											SA205-15		
VAK205-16		1											SA205-16		
VAK206-30MM	30		160	48	17	39.69	121	81.0	13	19	51.7	44.45	SA206-30MM		
VAK206-18		1-1/8	6.30	1.89	0.67	1.562	4.75	3.19	0.51	0.75	2.04	1.75	SA206-18	RAK30	1.2
VAK206-19		1-3/16											SA206-19		
VAK206-20		1-1/4											SA206-20		
VAK207-35MM	35		167	48	19	46.04	127	92.1	15	19	54.4	55.58	SA207-35MM		
VAK207-20		1-1/4	6.57	1.89	0.75	1.812	5.00	3.63	0.60	0.75	2.14	2.19	SA207-20	RAK35	1.6
VAK207-22		1-3/8											SA207-22		
VAK207-23		1-7/16											SA207-23		
VAK208-40MM	40		181	54	19	49.21	140	100.0	15	19	61.7	60.3	SA208-40MM	RAK40	2.0
VAK208-24		1-1/2	7.13	2.13	0.75	1.937	5.50	3.94	0.60	0.75	2.43	2.37	SA208-24		
VAK209-45MM	45		190	54	21	52.39	146	104.8	15	19	61.2	63.5	SA209-45MM		
VAK209-26		1-5/8	7.50	2.13	0.83	2.062	5.75	4.13	0.60	0.75	2.41	2.50	SA209-26	RAK45	2.3
VAK209-27		1-11/16											SA209-27		
VAK209-28		1-3/4											SA209-28		
VAK210-50MM	50		203	57	22	55.56	159	112.7	15	19	62.2	69.85	SA210-50MM		
VAK210-30		1-7/8	8	2.24	0.87	2.187	6.25	4.44	0.60	0.75	2.45	2.75	SA210-30	RAK50	2.8
VAK210-31		1-15/16											SA210-31		
VAK210-32		2											SA210-32		
VAK211-55MM	55		232	60	25	61.9	181	125	20	24	67.9	76.2	SA211-55MM		
VAK211-32		2	9.13	2.36	0.98	2.437	7.13	4.92	0.79	0.94	2.67	3	SA211-32	RAK55	3.8
VAK211-34		2-1/8											SA211-34		
VAK211-35		2-3/16											SA211-35		
VAK212-60MM	60		241	64	29	68.3	191	136	20	24	74.1	84.2	SA212-60MM		
VAK212-36		2-1/4	9.49	2.52	1.14	2.687	7.52	5.35	0.79	0.94	2.92	3.31	SA212-36	RAK60	5.0
VAK212-38		2-3/8											SA212-38		
VAK212-39		2-7/16											SA212-39		

Note: Set Screw and Adapter Lock Bearings also available from stock.