Heavy Duty 4-Bolt Flange

UCF 300 PTI Series

Cast Iron Housing
Set Screw Lock
Metric and Inch Bores

Models Available



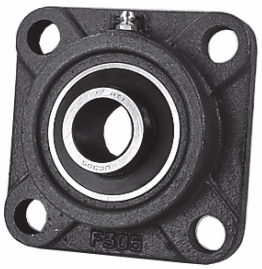

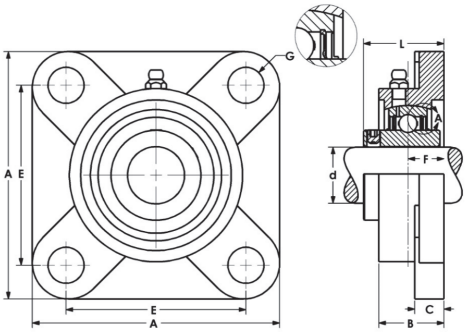

Part No.	Shaft Size d		Dimensions (mm) (in)							Bearing No.	Housing No.	Wt. kg
	mm	in	A	B	C	E	F	G	L			
UCF305-25MM UCF305-14 UCF305-16	25	 7/8 1	110 4.33	29 1.14	13 0.50	80 3.150	16 0.63	16 0.63	39 1.54	UC305-25MM UC305-14 UC305-16	F305	1.2
UCF306-30MM UCF306-18 UCF306-19	30	 1-1/8 1-3/16	125 4.92	32 1.26	15 0.60	95 3.740	18 0.71	16 0.63	44 1.73	UC306-30MM UC306-18 UC306-19	F306	1.8
UCF307-35MM UCF307-20 UCF307-22 UCF307-23	35	 1-1/4 1-3/8 1-7/16	135 5.31	36 1.42	16 0.63	100 3.937	20 0.79	19 0.75	49 1.93	UC307-35MM UC307-20 UC307-22 UC307-23	F307	2.3
UCF308-40MM UCF308-24	40	 1-1/2	150 5.91	40 1.57	17 0.67	112 4.409	23 0.91	19 0.75	56 2.20	UC308-40MM UC308-24	F308	2.9
UCF309-45MM UCF309-27 UCF309-28	45	 1-11/16 1-3/4	160 6.30	44 1.73	18 0.70	125 4.921	25 0.98	19 0.75	60 2.36	UC309-45MM UC309-27 UC309-28	F309	3.6
UCF310-50MM UCF310-30 UCF310-31	50	 1-7/8 1-15/16	175 6.89	48 1.89	19 0.75	132 5.197	28 1.10	23 0.91	67 2.64	UC310-50MM UC310-30 UC310-31	F310	4.7
UCF311-55MM UCF311-32 UCF311-35	55	 2 2-3/16	185 7.28	52 2.05	20 0.79	140 5.512	30 1.18	23 0.91	71 2.80	UC311-55MM UC311-32 UC311-35	F311	5.7
UCF312-60MM UCF312-39	60	 2-7/16	195 7.68	56 2.20	22 0.87	150 5.906	33 1.30	23 0.91	78 3.07	UC312-60MM UC312-39	F312	6.8
UCF313-65MM UCF313-40	65	 2-1/2	208 8.19	58 2.28	22 0.87	166 6.535	33 1.30	23 0.91	78 3.07	UC313-65MM UC313-40	F313	7.7
UCF314-70MM UCF314-44	70	 2-3/4	226 8.90	61 2.40	25 0.98	178 7.008	36 1.42	25 0.98	81 3.19	UC314-70MM UC314-44	F314	9.6
UCF315-75MM UCF315-47 UCF315-48	75	 2-15/16 3	236 9.29	66 2.60	25 0.98	184 7.244	39 1.54	25 0.98	89 3.50	UC315-75MM UC315-47 UC315-48	F315	11.5
UCF316-80MM UCF316-51	80	 3-3/16	250 9.84	68 2.68	27 1.06	196 7.717	38 1.50	31 1.22	90 3.54	UC316-80MM UC316-51	F316	13.5
UCF317-85MM UCF317-52	85	 3-1/4	260 10.24	74 2.91	27 1.06	204 8.031	44 1.73	31 1.22	100 3.94	UC317-85MM UC317-52	F317	15.2
UCF318-90MM UCF318-56	90	 3-1/2	280 11.02	76 2.99	30 1.18	216 8.504	44 1.73	35 1.38	100 3.94	UC318-90MM UC318-56	F318	18.9
UCF319-95MM UCF319-60	95	 3-3/4	290 11.42	94 3.70	30 1.18	228 8.976	59 2.32	35 1.38	121 4.76	UC319-95MM UC319-60	F319	22.3
UCF320-100MM UCF320-63 UCF320-64	100	 3-15/16 4	310 12.20	94 3.70	32 1.25	242 9.528	59 2.32	38 1.50	125 4.92	UC320-100MM UC320-63 UC320-64	F320	26.1
UCF322-110MM	110	—	340	96	35	266	60	41	131	UC322-110MM	F322	35.3
UCF324-120MM	120	—	370	110	40	290	65	41	140	UC324-120MM	F324	47.2
UCF326-130MM	130	—	410	115	45	320	65	41	146	UC326-130MM	F326	64.5
UCF328-140MM	140	—	450	125	55	350	75	41	161	UC328-140MM	F328	93.3