Take-Up

CLT 200 PTI Series

Normal Duty Bearing
Cast Iron Housing
Concentric Locking Collar
Metric and Inch Bores



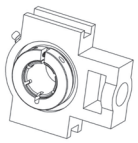

Models Available

The locking collar provides for a concentric fit to the shaft

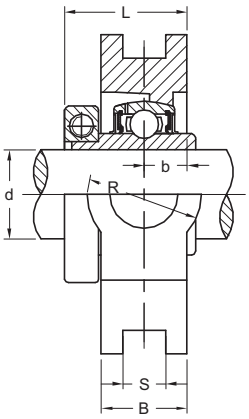

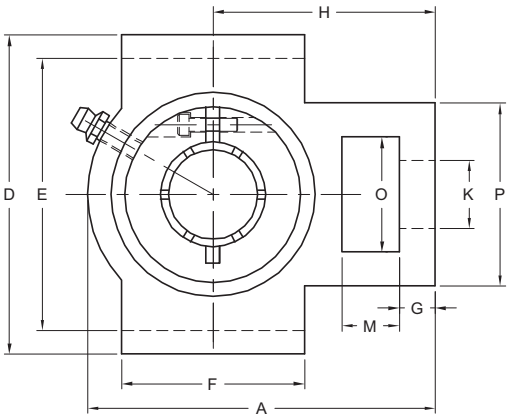

Part No.	Shaft Size d		Dimensions (mm) (in)															Bearing No.	Housing No.	Wt. kg
	mm	in	A	B	b	D	E	F	G	H	K	L	M	O	P	R	S			
CLT204-20MM CLT204-12	20	 3/4	94 3.70	21 0.83	10.5 0.41	89 3.50	76 2.99	51 2.01	10 0.39	61 2.40	19 0.75	30.3 1.19	16 0.63	32 1.26	51 2.01	32 1.26	12 0.47	CL204-20MM CL204-12	T204	0.76
CLT205-25MM CLT205-14 CLT205-15 CLT205-16	25	 7/8 15/16 1	97 3.82	24 0.94	12 0.47	89 3.50	76 2.99	51 2.01	10 0.39	62 2.44	19 0.75	34.2 1.35	16 0.63	32 1.26	51 2.01	32 1.26	12 0.47	CL205-25MM CL205-14 CL205-15 CL205-16	T205	0.97
CLT206-30MM CLT206-18 CLT206-19 CLT206-20	30	 1-1/8 1-3/16 1-1/4	113 4.45	28 1.10	14 0.55	102 4.02	89 3.50	57 2.24	10 0.39	70 2.76	22 0.87	37.8 1.49	16 0.63	37 1.46	56 2.20	37 1.46	12 0.47	CL206-30MM CL206-18 CL206-19 CL206-20	T206	1.31
CLT207-35MM CLT207-20 CLT207-22 CLT207-23	35	 1-1/4 1-3/8 1-7/16	129 5.08	30 1.18	15 0.59	102 4.02	89 3.50	64 2.52	13 0.51	78 3.07	22 0.87	42.0 1.65	16 0.63	37 1.46	64 2.52	37 1.46	12 0.47	CL207-35MM CL207-20 CL207-22 CL207-23	T207	1.43
CLT208-40MM CLT208-24	40	 1-1/2	144 5.67	33 1.30	16.5 0.65	114 4.49	102 4.02	83 3.27	16 0.63	88 3.46	29 1.14	48.3 1.90	19 0.75	49 1.93	83 3.27	49 1.93	16 0.63	CL208-40MM CL208-24	T208	2.14
CLT209-45MM CLT209-26 CLT209-27 CLT209-28	45	 1-5/8 1-11/16 1-3/4	144 5.67	35 1.38	17.5 0.65	117 4.61	102 4.02	83 3.27	16 0.63	87 3.43	29 1.14	49.3 1.94	19 0.75	49 1.93	83 3.27	49 1.93	16 0.63	CL209-45MM CL209-26 CL209-27 CL209-28	T209	2.21
CLT210-50MM CLT210-31 CLT210-32	50	 1-15/16 2	149 5.87	37 1.46	18.5 0.73	117 4.61	102 4.02	86 3.39	16 0.63	90 3.54	29 1.14	52.6 2.07	19 0.75	49 1.93	83 3.27	49 1.93	16 0.63	CL210-50MM CL210-31 CL210-32	T210	2.29
CLT211-55MM CLT211-32 CLT211-34 CLT211-35	55	 2 2-1/8 2-3/16	171 6.73	38 1.50	19 0.75	146 5.75	130 5.12	95 3.74	19 0.75	106 4.17	35 1.38	53.9 2.12	25 0.98	64 2.52	102 4.02	64 2.52	22 0.87	CL211-55MM CL211-32 CL211-34 CL211-35	T211	3.59
CLT212-60MM CLT212-36 CLT212-38 CLT212-39	60	 2-1/4 2-3/8 2-7/16	194 7.64	42 1.65	21 0.83	146 5.75	130 5.12	102 4.02	19 0.75	119 4.69	35 1.38	62.3 2.45	32 1.26	64 2.52	102 4.02	64 2.52	22 0.87	CL212-60MM CL212-36 CL212-38 CL212-39	T212	4.75

Note: Other sizes available on request.