Thermoplastic Take-Up Units

SHCTT 200 PTI Series

Stainless Steel Normal Duty Bearing
PBT Thermoplastic Housing
Eccentric Lock Collar
Metric and Inch Bores
Narrow Slot





PBT Black Housing available

Housing:

- Material: Reinforced PBT (polybutylene terephthalate)
- Working Temperatures: -10°F to 210°F
- Interchanges with standard housing dimensions
- Sleeves and bushings are stainless steel
- Solid base, smooth housing designed for washdown
- Excellent chemical resistance
- Grease Fitting: AISI 304



Open and Closed End Covers Optional

Bearing Insert:

- Inner & Outer Race: AISI 440C Stainless
- Cage: AISI 302 Stainless
- Collar: AISI 304 Stainless
- Balls: AISI 440C Stainless
- Seals: Rubber & AISI 302 Stainless
- Set Screw: AISI 302 Stainless
- Grease: Mobil FM222 NSF H-1 Food Grade

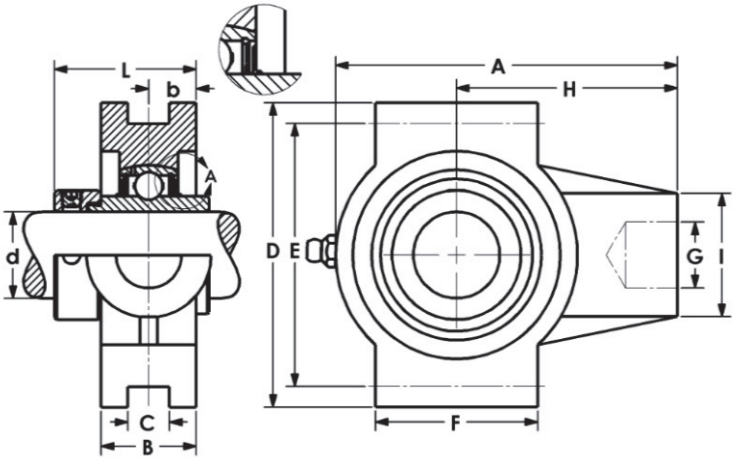

Models Available

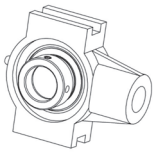

Part No.	Shaft Size d		Dimensions (mm) (in)											Bearing No.	Housing No. **	Wt. kg
	mm	in	A	B	b	C **	D	E	F	G*	H	I	L			
SHCTT201-8		1/2	3.90	24	12	0.47	3.46	2.99	1.85	—	2.52	1.42	39.3	SHC201-8	TT204 (TT204BLK)	0.30
SHCTT202-10		5/8	3.90	0.94	0.47	0.47	3.46	2.99	1.85	1/2-13	2.52	1.42	1.55	SHC202-10		
SHCTT204-20MM	20		99	27.5	12.7	12	88	76	47	—	64	36	39.3	SHC204-20MM	TT204 (TT204BLK)	0.40
SHCTT204-12		3/4	3.90	1.08	0.50	0.47	3.46	2.99	1.85	1/2-13	2.52	1.42	1.55	SHC204-12		
SHCTT205-25MM	25		101.5	27.5	14.3	12	88	76	46.5	—	64	35	41.2	SHC205-25MM	TT205 (TT205BLK)	0.35
SHCTT205-15		15/16	4.00	1.08	0.56	0.47	3.46	2.99	1.83	1/2-13	2.52	1.38	1.62	SHC205-15		
SHCTT205-16		1												SHC205-16		
SHCTT206-30MM	30		125	34.5	15.9	12	102	89	63	—	76	40	46.0	SHC206-30MM	TT206 (TT206BLK)	0.65
SHCTT206-19		1-3/16	4.92	1.10	0.63	0.47	4.02	3.50	2.48	5/8-11	2.99	1.57	1.81	SHC206-19		
SHCTT206-20		1-1/4												SHC206-20		
SHCTT207-35MM	35		125	34.5	17.5	12	102	89	63	—	76	40	49.8	SHC207-35MM	TT207 (TT207BLK)	0.50
SHCTT207-20		1-1/4	4.92	1.10	0.69	0.47	4.02	3.50	2.48	5/8-11	2.99	1.57	1.96	SHC207-20		
SHCTT207-22		1-3/8												SHC207-22		
SHCTT207-23		1-7/16												SHC207-23		
SHCTT208-40MM	40		140	34.5	17.5	16	114	102	80	—	85	40	52.2	SHC208-40MM	TT208 (TT208BLK)	.65
SHCTT208-24		1-1/2	5.51	1.36	0.69	0.63	4.49	4.02	3.15	5/8-11	3.35	1.57	2.06	SHC208-24		

Note: Threaded Insert (G dimension) stocked only in inch threads. Metric threads available on request. ** Wide Slot optional. For Black Housing include BLK as suffix. Example: SHCTT204-12BLK.