Stainless Steel Ball Bearing Inserts

SSER 200 PTI Series

Set Screw Lock
Normal Duty
Metric and Inch Bores
OD Snap Ring
Wide Inner Ring

Bearing Materials:
- Inner & Outer Race: AISI 440C Stainless
- Cage: AISI 302 Stainless
- Balls: AISI 400C Stainless
- Seals: Rubber & AISI 302 Stainless
- Set Screws: AISI 302 Stainless
- Snap Ring: AISI 304 Stainless
- Grease: Mobil FM222, USDA H-1

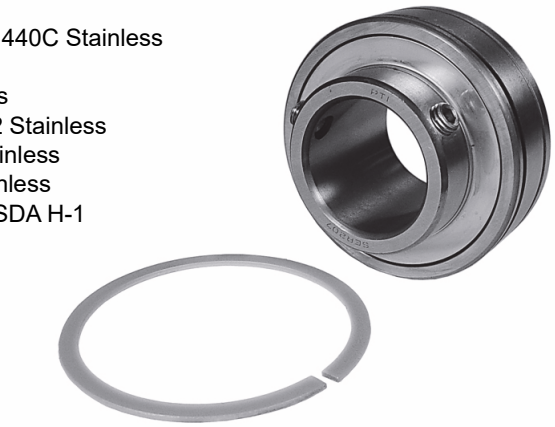

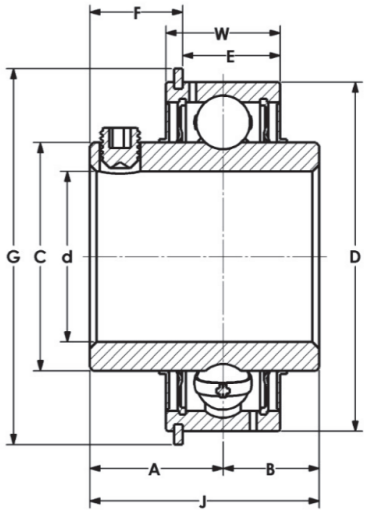

Part No.	Shaft Size d		Dimensions (mm) (in)									Load Ratings		Max rpm	Wt. kg
	mm	in	A	B	C	D	E	F	G	J	W	Dynamic C N lbf	Static C_o N lbf		
SSER204-20MM	20		19.5	11.5	28.3	47	12.06	15.08	52.7	31	15.9	10560	5190	7450	0.3
SSER204-12		3/4	0.77	0.45	1.11	1.850	0.47	0.59	2.07	1.22	0.63	2400	1180		
SSER205-25MM	25		21.8	13.1	34.0	52	15.29	15.78	57.9	34.9	19.1	11440	6290		
SSER205-15		15/16	0.86	0.52	1.34	2.047	0.60	0.62	2.28	1.37	0.75	2600	1430	6250	0.3
SSER205-16		1													
SSER206-30MM	30		22.2	15.9	40.3	62	17.02	15.93	67.7	38.1	22.2	16280	8900		
SSER206-18		1-1/8	0.87	0.63	1.59	2.441	0.67	0.63	2.67	1.50	0.87	3700	2030	5300	0.4
SSER206-19		1-3/16													
SSER206-20		1-1/4													
SSER207-35MM	35		25.4	17.5	46.9	72	18.62	18.32	78.6	42.9	23.8	21340	12320		
SSER207-20		1-1/4	1.0	0.69	1.85	2.835	0.73	0.72	3.09	1.69	0.94	4850	2800	4500	0.5
SSER207-23		1-7/16													
SSER208-40MM	40		30.2	19	52.4	80	22.62	21.1	86.6	49.2	27.8	24640	14080	4000	0.7
SSER208-24		1-1/2	1.19	0.75	2.06	3.150	0.89	0.83	3.41	1.94	1.09	5600	3200		
SSER209-45MM	45		30.2	19	57.4	85	22.62	21.1	91.6	49.2	27.8	27280	15840		
SSER209-27		1-11/16	1.19	0.75	2.26	3.346	0.89	0.83	3.61	1.94	1.09	6200	3600	3700	0.8
SSER209-28		1-3/4													
SSER210-50MM	50		32.6	19	61.8	90	22.62	23.84	96.5	51.6	28.6	29920	18500		
SSER210-31		1-15/16	1.28	0.75	2.43	3.543	0.89	0.94	3.80	2.03	1.13	6800	4200	3400	0.9
SSER210-32		2													
SSER211-55MM	55		33.4	22.2	68.7	100	24.22	23.84	106.5	55.6	30.2	43030	28950		
SSER211-32		2	1.31	0.87	2.70	3.937	0.95	0.94	4.19	2.19	1.19	9780	6580	3100	1.2
SSER211-35		2-3/16													
SSER212-60MM	60		39.7	25.4	75.7	110	25.82	29.4	116.6	65.1	31.8	52000	35590	2800	1.6
SSER212-39		2-7/16	1.56	1.00	2.98	4.331	1.02	1.16	4.59	2.56	1.25	11800	8090		