☐ **VE-832C** ☐ **VE-822C**
☐ **VE-812C**

# Two Handle Tub & Shower Faucet

Product Spec Sheet



## Features & Benefits

- Acrylic Round Handles
- Washerless Cartridges
- Non Pressure Balanced
- Diverter Slip Fit Spout
- Max Flow Rate 2.0 GPM (7.6 L/MIN) at 80 PSI (ASME A112.18.1M/A112.18.1)

VE-832C
Tub & Shower Faucet
Chrome Finish

VE-822C
Less Spout
Chrome Finish

VE-812C
Less Shower
Chrome Finish

**Approvals:**
**Meets or Exceeds The Following:**

* ANSI/ASME A112.18.1M/A112.18.1

* WaterSense Only On Models Containing Showerheads


**CALIFORNIA:** ***TEL:*** *866-532-8306* ***FAX:*** *866-532-8307*
**TEXAS:** ***TEL:*** *800-935-5456* ***FAX:*** *800-683-4247*
**NEW YORK:** ***TEL:*** *800-431-2082* ***FAX:*** *800-640-2252*

**Visit Our Web Site : www.matco-norca.com**

# ☐ VE-832C ☐ VE-822C
# ☐ VE-812C

MATCO NORCA

# Two Handle Tub & Shower Faucet

Product Spec Sheet

| No. | Name | Part No. |
|---|---|---|
| 1 | Shower Head | S1214202 |
| 2 | Shower Arm | A020002 |
| 3 | Shower Arm Flange | A019001 |
| 4-a | Index Button-Cold | A66D694C |
| 4-b | Index Button-Hot | A66D694H |
| 5 | Acrylic Handle | A029001 |
| 6 | Escutcheon | A111001-S |
| 7 | Sleeve | A216106 |
| 8 | Stem Extension-Hot | A517000H |
| 9 | Cartridge Assembly | A66D636N |
| 10 | Seat & Spring Set | A663002 |
| 11 | Union Nut | A603668 |
| 12 | Spout W/Diverter | A118011 |
| 13 | Spout Less Diverter | A132025 |
| 14 | Hex Wrench | |
| | (H 3.18 * 20 mm L * 90 mm L) | A031017NI |
| 15 | Plug | A028004 |

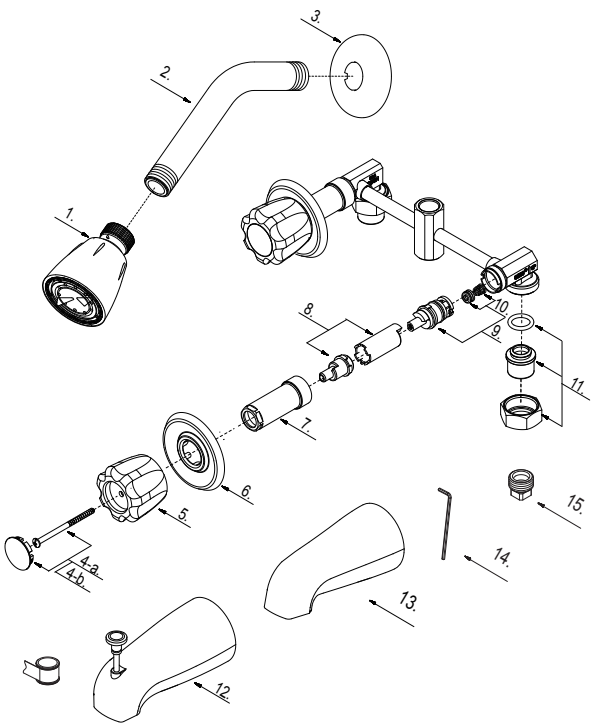


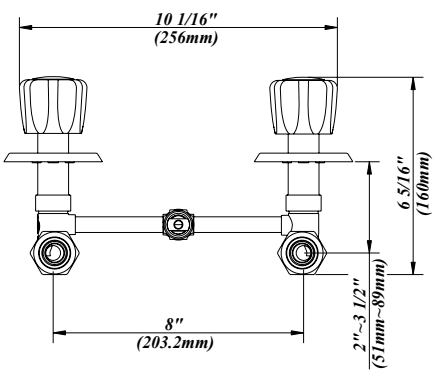


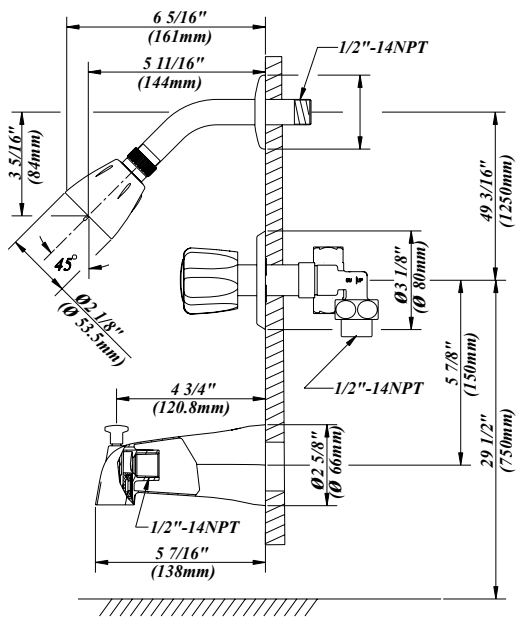



CALIFORNIA: TEL: 866-532-8306 FAX: 866-532-8307
TEXAS: TEL: 800-935-5456 FAX: 800-683-4247
NEW YORK: TEL: 800-431-2082 FAX: 800-640-2252
Visit Our Web Site : www.matco-norca.com