HAV Steam Air Valves • Spec Sheet



FEATURES & BENEFITS

- Steam Air Valves
- Chrome Plated
- Straight, Angle & Adjustable Options Available
- ISO 9001:2008
- Size 1/8", 1/4" & 3/4" x 1/2"

Part #	Size
HAVA00	1/8" Angle
HAVADJ00	1/8" Adjustable
HAVS00	1/8" Straight
HAVS01	1/4" Straight
HAVS0403	3/4" x 1/2" Straight

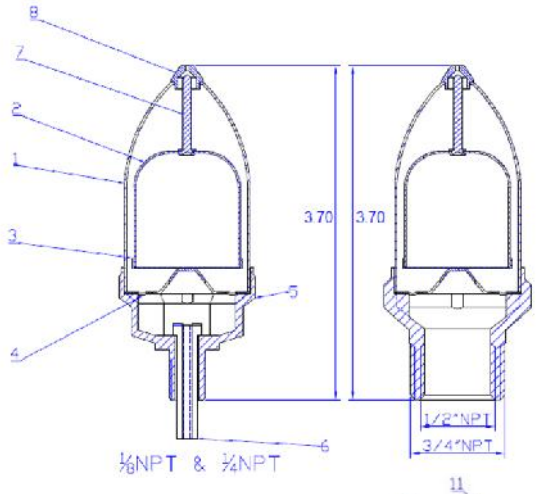

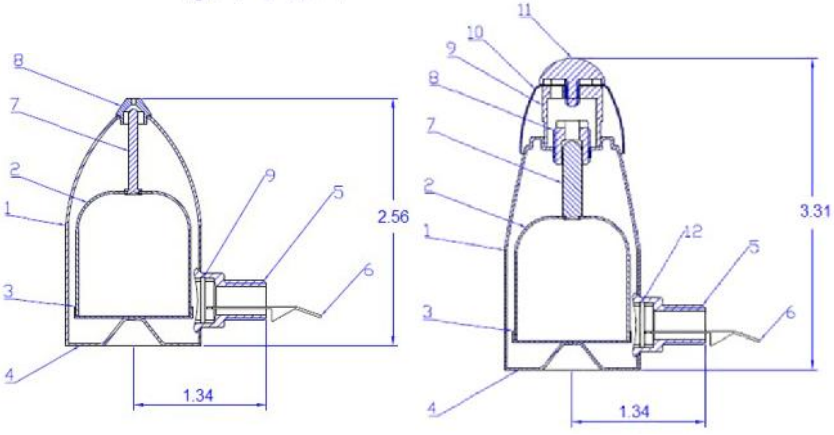

MATERIAL SPECIFICATIONS

HAVS

Max. Operating Pressure 6 PSI

No.	Part	Material
1	Vent Body	Brass C26800
2	Float	Brass C26800
3	Float Actuator Base	Brass C51180
4	Base	Brass C26800
5	Vent Base	Brass C37700
6	Flow Guide	Brass C26800
7	Stem	Brass C36000
8	Steam Seat	Brass C36000

HAVA

Max. Operating Pressure 6 PSI

No.	Part	Material
1	Vent Body	Brass C26800
2	Float	Brass C26800
3	Float Actuator Base	Brass C51180
4	Base	Brass C26800
5	Inlet Adapter	Brass C36000
6	Flow Guide	Brass C26800
7	Stem	Brass C36000
8	Steam Seat	Brass C36000
9	Spring	SS 304

HAVADJ

Max. Operating Pressure 1-1/2 PSI

No.	Part	Material
1	Vent Body	Brass C26800
2	Float	Brass C26800
3	Float Actuator Base	Brass C51180
4	Base	Brass C26800
5	Inlet Adapter	Brass C36000
6	Flow Guide	Brass C26800
7	Stem	Brass C36000
8	Steam Seat	Brass C36000
9	Vent Orifice	Brass C36000
10	Adj Collar	Brass C26800
11	Lock Screw	Brass C36000
12	Spring	SS 304

MATCO-NORCA

Global sourcing. National compliance. Local service.

CALIFORNIA 5593 Fresca Dr., La Palma CA 90623 • Toll Free: 866-532-8306 • Fax: 866-532-8307
TEXAS 1150 Silber Rd., Houston TX 77055 • Toll Free: 800-935-5456 • Fax: 713-680-2999
NEW YORK PO Box 27, Rt. 22, Brewster NY 10509 • Toll Free: 800-431-2082 • Fax: 845-278-9056
WEB: **www.matco-norca.com** EMAIL: **mail@matco-norca.com**