FLOW CONTROL VALVE
FRGX1040

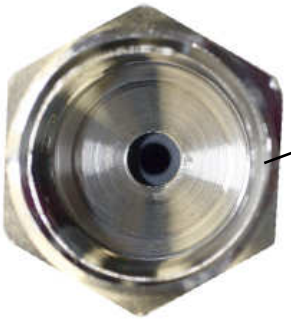

Top View

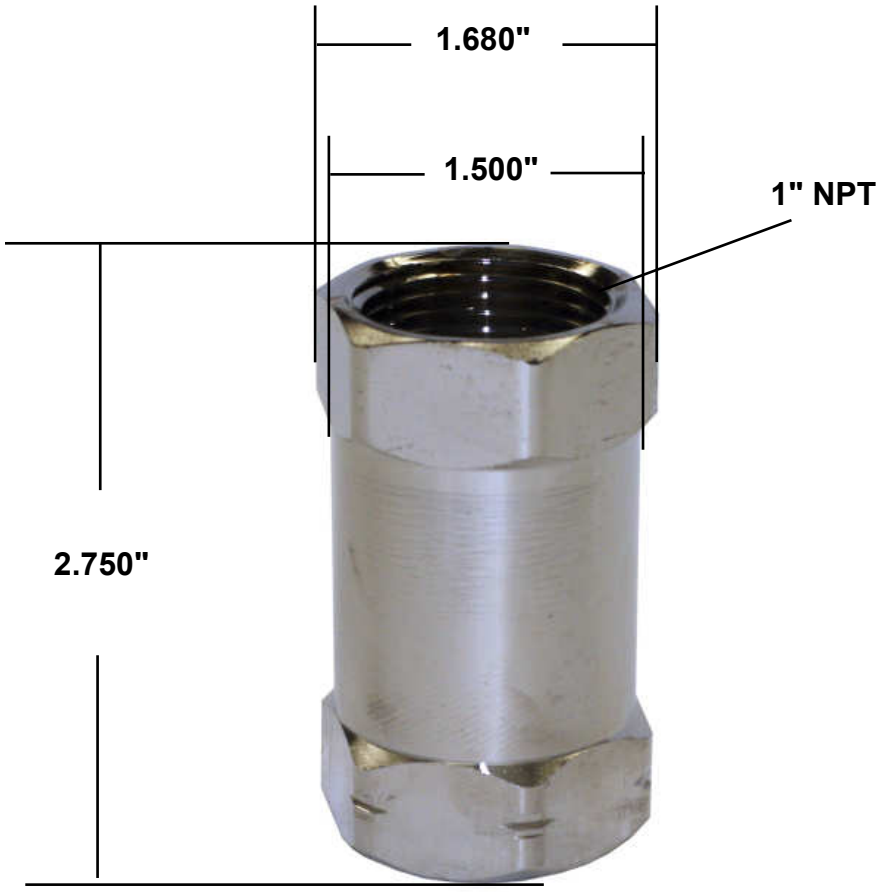

Inlet/Outlet - 1" FNPT
Flow Rate - 4.0 GPM
Threshold Pressure - 15-25 PSI