120U Cast Iron Swing Check Valve • Spec Sheet



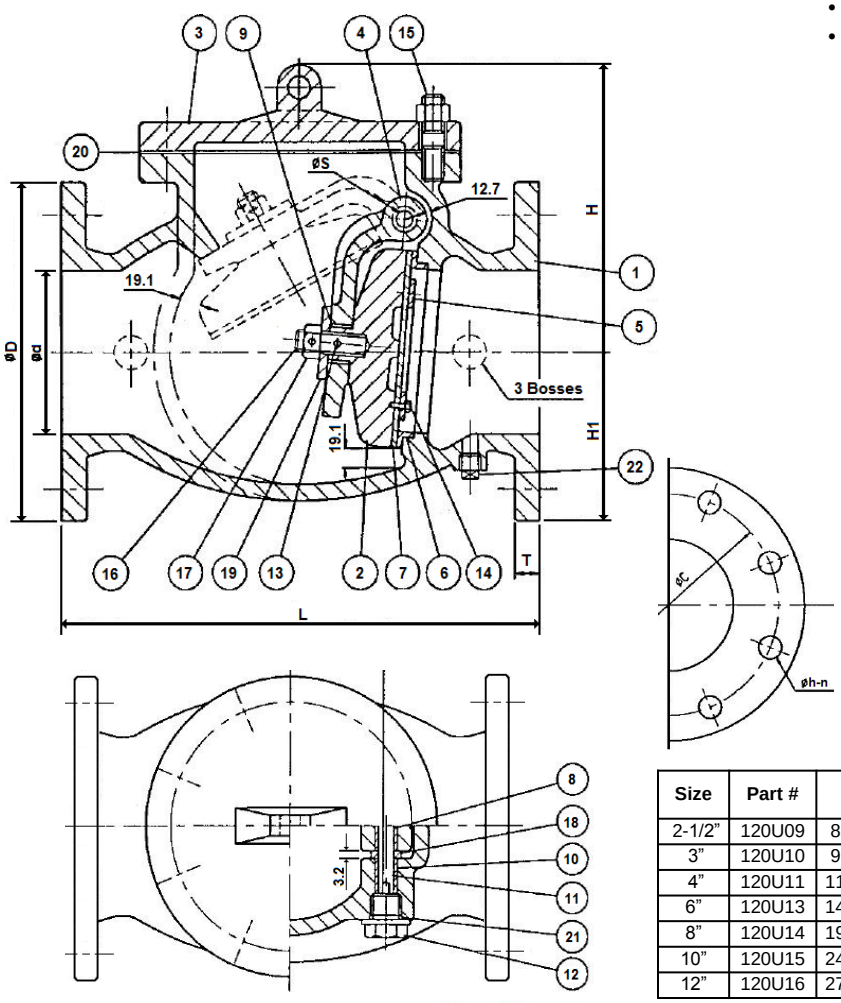

FEATURES & BENEFITS

- ISO-9002
- Check Valve-Flanged Ends
- 175 CWP
- U.L. Listed / F.M. Approved
- N.Y.C. Approved (MEA257)
- MSS SP 71Compliant
- C.I. Body w/1 Boss & Drain Plug on Bottom
- Fusion Bonded Epoxy Coating
- Bolted Cover with Lifting Eye
- Resilient Seat
- Flanged Ends Conform with ANSI B16.1
- Sizes 2 1/2" - 12"

MATERIAL SPECIFICATIONS

No.	Part	Material	ASTM Designation
1	Body	Cast Iron	A 126 Class B
2	Disc	Cast Iron	A 126 Class B
3	Cover	Cast Iron	A 126 Class B
4	Arm	Cast Iron	A 126 Class B
5	Seat Holder	Bronze	B 62
6	Body Seat Ring	Bronze	B 62
7	Disc Seat Ring	Rubber (BUNA-N)	D2000 AA 7014
8	Arm Bushing	Bronze	B 62
9	Arm Disc Bushing	Bronze	B 62
10	Body Bushing	Bronze	B 62
11	Hinge Pin	Stainless Steel	A 276 Type 304
12	Plug (A)	Brass	B 36
13	Roll Pin	Stainless Steel	A 276 Type 304
14	Disc Seat Bolt	Stainless Steel	A 276 Type 304
15	Cover Stud & Nut	Steel	A 307 Grade B
16	Disc Stud	Brass	B 36
17	Disc Nut	Brass	B 36
18	Spacer	Bronze	B 62
19	Washer	Brass	B 36
20	Cover Gasket	Rubber (BUNA-N)	D2000 AA 7014
21	O-Ring	Rubber (BUNA-N)	D2000 AA 7014
22	Plug (B)	Brass	A 47

DIMENSIONS

Size	Part #	L	ØD	ØC	Øh	n	T	H	H1	ØS	Approx. WT. LBS
2-1/2"	120U09	8.50	7.00	5.50	0.75	4	.69	6.58	3.51	.37	447
3"	120U10	9.50	7.50	6.00	0.75	4	.75	7.49	3.76	.37	51
4"	120U11	11.50	9.00	7.50	0.75	8	.94	8.31	4.51	.37	80
6"	120U13	14.00	11.00	9.50	0.87	8	1.00	10.60	5.50	.63	152
8"	120U14	19.50	13.50	11.80	0.87	8	1.13	12.21	6.76	.75	313
10"	120U15	24.50	16.00	14.25	1.00	12	1.19	13.87	8.00	.87	462
12"	120U16	27.50	19.00	17.00	1.00	12	1.25	16.27	9.52	.87	660

MATCO-NORCA

Global sourcing. National compliance. Local service.

CALIFORNIA 5593 Fresca Dr., La Palma CA 90623 • Toll Free: 866-532-8306 • Fax: 866-532-8307
TEXAS 1150 Silber Rd., Houston TX 77055 • Toll Free: 800-935-5456 • Fax: 713-680-2999
NEW YORK PO Box 27, Rt. 22, Brewster NY 10509 • Toll Free: 800-431-2082 • Fax: 845-278-9056
WEB: **www.matco-norca.com** EMAIL: **mail@matco-norca.com**