Hi-Bay LED Series

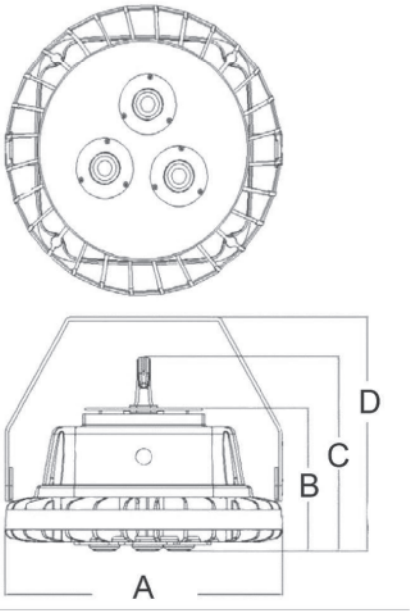

71402

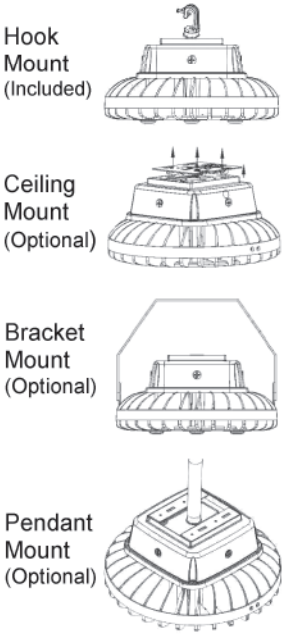

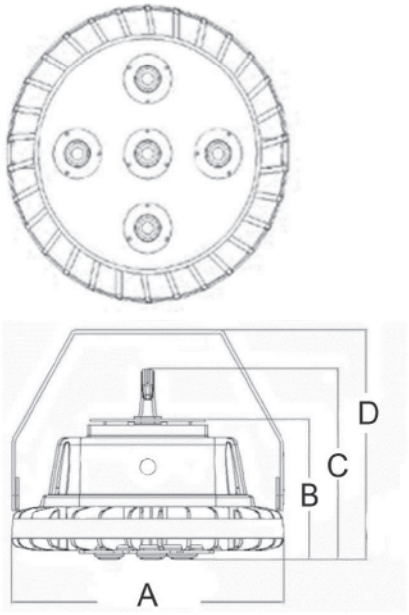

71403 & 71404

- Cree COB LEDs
- Integral Cooling Fin Releases Heat Efficiently to Maintain the Life of LEDs & LED Driver
- Corrosion Resistant Die Cast Aluminum Housing
- Superior Architectural White Powder Coat Finish
- Stainless Steel Hardware
- Hook Mount (Alternate Mounting Kits Available)
- Operation Temperature: -40°F to 131°F
- 50,000+ Hour LED Life Expectancy
- Voltage: 120/208/240/277VAC
- Color Temperature: 5000K Cool White
- CRI: 82+
- Light Pattern: 120° Beam Spread Flood
- IP65 (NEMA 4X) Dust & Water Tight
- 5 Threaded Apertures - (4)Sides, (1)Top
- cULus listed for Wet Locations
- DLC Listed
- 5 Year Warranty

Cat. No.	Watts	Delivered Lumens	Replaces Metal Halide	Dimensions (Inches)				Weight (Lbs)	Case Qty
				A	B	C	D		
71402	100	9,954	175W	13	6-3/8	8-11/16	10-7/16	15	1
71403	150	17,371	250W	16	7-5/8	10-5/16	13-1/4	26	1
71404	220	25,045	400W	16	7-5/8	10-5/16	13-1/4	26	1
71407	Ceiling Mount Kit								1
71408	Bracket Mounting Kit for 71402								1
71410	Bracket Mounting Kit for 71403 & 71404								1
71409	Pendant Mounting Kit								1