JUNIOR DUO BASKET STRAINER

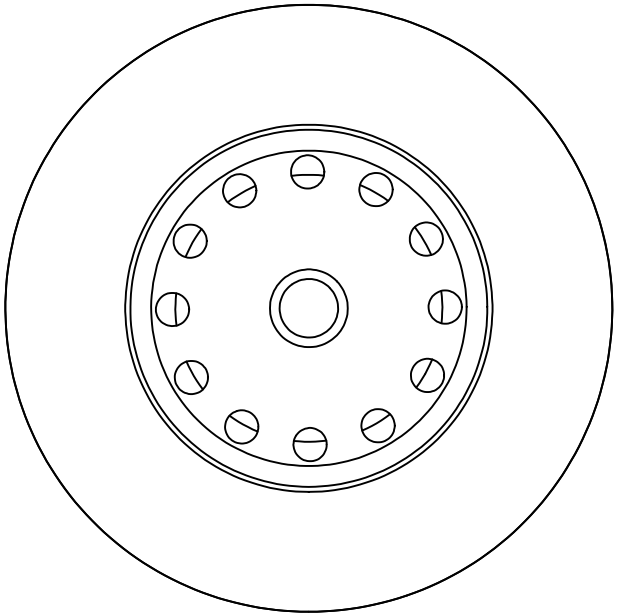

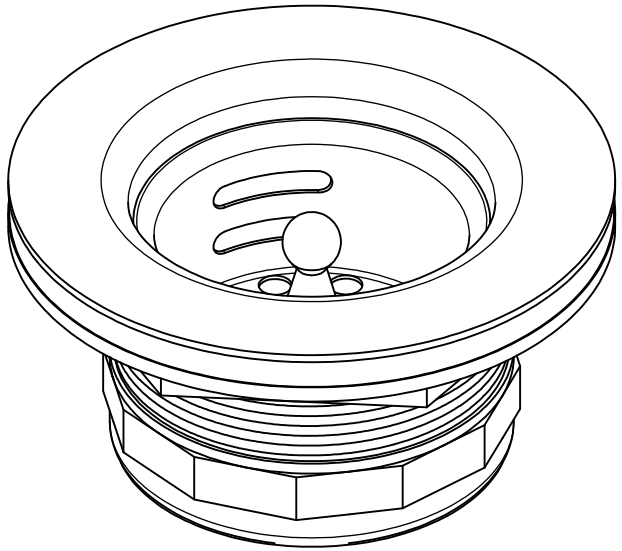

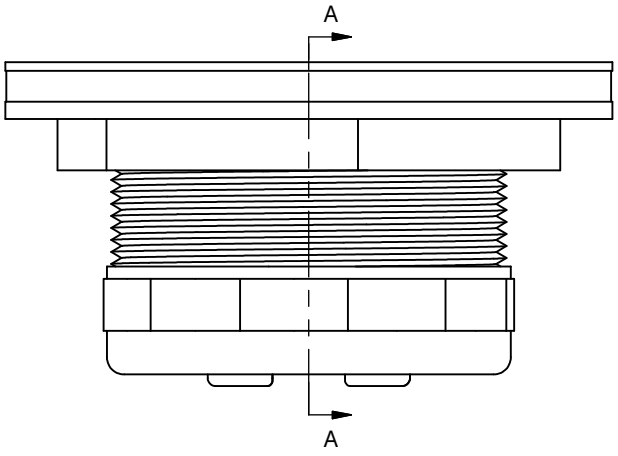

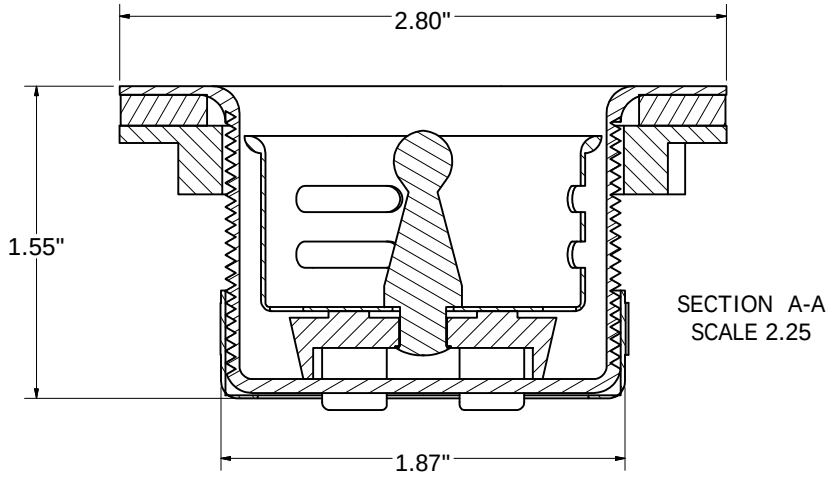

SECTION A-A
SCALE 2.25

Jones Stephens Corp.

PHONE NUMBER 1-800-355-6637
FAX NUMBER 1-800-462-6991

SCALE 2.25 : 1 | DATE 8-23-11

SHEET 1 OF 1

DRAWN BY ASHLEY KRALOVEC

PART NO.	B02050	B02100	B0250BN	B0250NP	B0250RB	B0250WB
FINISH	CHROME PLATED	POLISHED BRASS	BRUSHED NICKEL	PEARL NICKEL	OIL RUBBED BRONZE	OLD WORLD BRONZE