DRAWING NO.
AL 91280

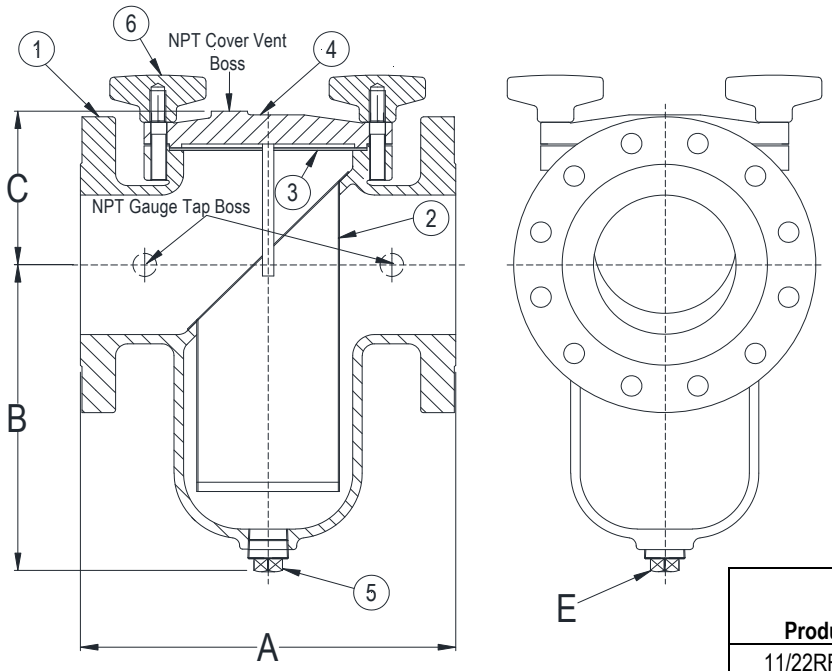

BODY PRESSURE & TEMPERATURE RATINGS – NON SHOCK		
NOM. RATING	**MEDIA**	**1-1/2" to 12"**
150# (STANDARD FLANGE)	W.O.G.	200 PSI @ 200°F

PARTS LIST		
ITEM	**DESCRIPTION**	**MATERIAL**
1	BODY	CAST CARBON STEEL (ASTM A 216, GRADE WCB)
2	BASKET	STAINLESS STEEL (304)
3	GASKET	BUNA-N (MAX TEMPERATURE 200°F)
4	COVER	CAST CARBON STEEL (ASTM A 216, GRADE WCB)
5	PIPE PLUG	CARBON STEEL (A 105)
6	KNOB	STEEL

Product Number†	SIZE	DIMENSIONS (in)				COVER		WEIGHT (lbs)
		A	B	C	E	No. of Knobs	Size of Studs	
11/22RFS-CS062P34-BK	1-1/2	6-1/2	4-1/2	4	1/2	4		22
22RFS-CS062P34-BK	2	8-1/2	5-7/8	4-3/4	1/2	6	1/2-13 x 2	30
21/22RFS-CS062P34-BK	2-1/2	8	5-7/16	4-1/4	3/4	6	1/2-13 x 2	35
32RFS-CS062P34-BK	3	8-3/4	5-11/16	5-5/8	3/4	6	1/2-13 x 2-1/2	39
42RFS-CS062P34-BK	4	11-3/16	8-1/4	6-1/16	1	6	1/2-13 x 2-1/2	69
52RFS-CS125P34-BK	5	12-1/4	10-1/4	5-5/8	1	8	5/8-11 x 2-1/2	110
62RFS-CS125P34-BK	6	13-7/8	12-13/64	6-5/16	1-1/4	8	5/8-11 x 2-1/2	125
82RFS-CS125P34-BK	8	17-3/8	15-9/16	8-3/16	1-1/2	8	5/8-11 x 3	270
102RFS-CS125P34-BK	10	22	16	10-3/8	1-1/2	12	5/8-11 x 4	360
122RFS-CS125P34-BK	12	25	23-3/4	12-3/8	2	16	5/8-11 x 4	450

†See ***"Style SGFVK Product Number Configuration"*** for additional options.
Face to face values tolerance in compliance with ASME B16.5.

STANDARD SCREENS SUPPLIED

SIZE	SCREEN PERFORATION			
	FOR LIQUID	OPEN AREA	FOR STEAM	OPEN AREA
in	in		in	
1-12 to 4	1/16	30%	3/64	33%
5 to 14	1/8	43%	1/16	30%

Standard screens supplied are for **liquid service**, unless otherwise specified.
Options: Other perforations, meshes, and screen materials are available.

KECKLEY
3400 CLEVELAND SKOKIE ILLINOIS

DRAWING NO.
AL 91280

DIMENSIONAL ASSEMBLY

PART NO.

150# Flange Style SGFVK Carbon Steel

SCALE: NTS

Basket Strainer w/ 304 ss screen

DATE: 09/21/2020

MAT'L:

REQ. ---

DR. BY DSF