DRAWING NO.
AL 77012

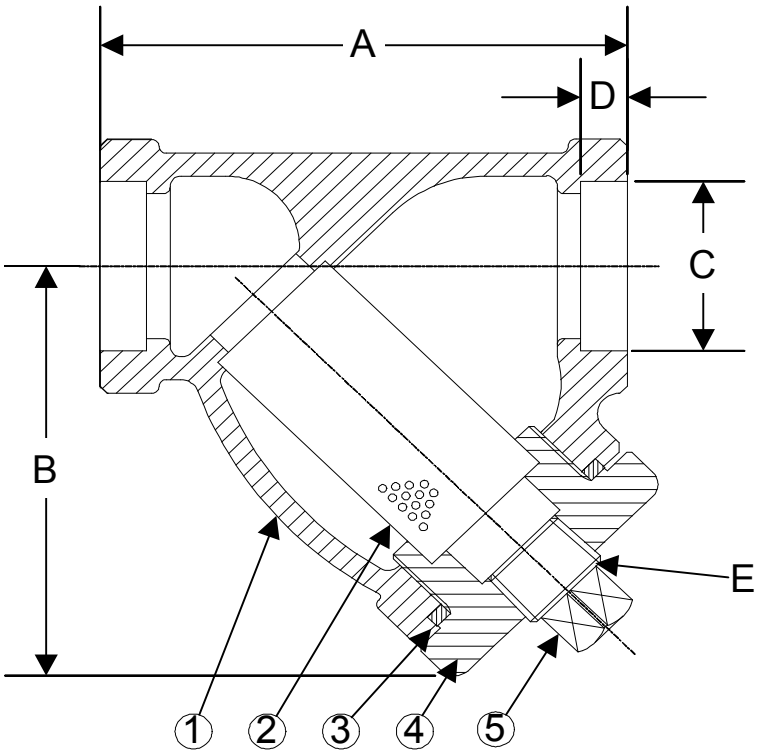

BODY PRESSURE & TEMPERATURE RATINGS – NON SHOCK		
NOM. RATING	**MEDIA**	**1/4" to 3"**
600# (Socket Weld)	STEAM	600 PSI @ 838°F
	W.O.G.	1480 PSI @ 100°F

PARTS LIST		
ITEM	**DESCRIPTION**	**MATERIAL**
1	BODY	CARBON STEEL (ASTM A 216, GRADE WCB)
2	SCREEN	STAINLESS STEEL (304)
3	GASKET	SPIRAL WOUND STAINLESS STEEL (304) – WITH GRAPHITE FILLER
4	CAP	CARBON STEEL (ASTM A 216, GRADE WCB

Optional: Blow-off Plug, Carbon Steel (ASTM A 105)

Product Number†	**SIZE**	**DIMENSIONS**					**WEIGHT**
		A	B	C	D	E	
1/45SWY-CS045P34-GT	1/4	2-15/16	2-7/16	0.555	3/8	1/4	3
3/85SWY-CS045P34-GT	3/8	2-15/16	2-7/16	0.690	3/8	1/4	3
1/25SWY-CS045P34-GT	1/2	2-15/16	2-7/16	0.855	3/8	1/4	3
3/45SWY-CS045P34-GT	3/4	3-11/16	3	1.065	1/2	3/8	5
15SWY-CS045P34-GT	1	4-9/16	4-5/16	1.330	1/2	3/8	6
11/45SWY-CS045P34-GT	1-1/4	4-15/16	4-3/16	1.675	1/2	3/4	8
11/25SWY-CS045P34-GT	1-1/2	5-9/16	4-11/16	1.915	1/2	3/4	10
25SWY-CS045P34-GT	2	6-15/16	6-1/4	2.406	5/8	1	16
21/25SWY-CS045P34-GT	2-1/2	12	9-3/8	2.906	5/8	1-1/4	43
35SWY-CS045P34-GT	3	12	9-3/8	3.535	5/8	1-1/4	43

†See ***"Style SB-7 Product Number Configuration"*** for additional options.

STANDARD SCREENS SUPPLIED

SIZE	**SCREEN GAGE**	**SCREEN PERFORATION**			
		FOR STEAM	**OPEN AREA**	**FOR LIQUID**	**OPEN AREA**
in		in		in	
1/4 to 3	26	3/64	33%	1/16	30%

Standard screens supplied are for **steam service**, unless otherwise specified.
Options: Other meshes, perforations, and screen materials are available.

KECKLEY
3400 CLEVELAND SKOKIE ILLINOIS

DRAWING NO.
AL 77012

DIMENSIONAL ASSEMBLY

PART NO.

¼" to 3" 600# Socket Weld Style SB-7

SCALE: NTS

DATE: 07/01/2011

MAT'L: Cast Carbon Steel | REQ. --- | DR. BY DSF