CELCON FAUCET HOLE COVER

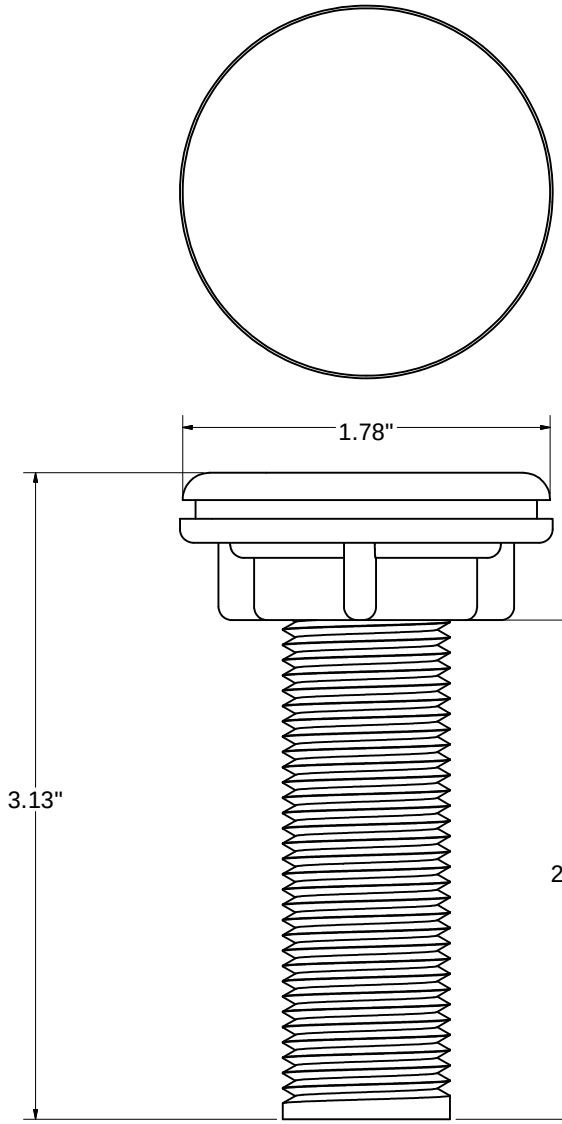

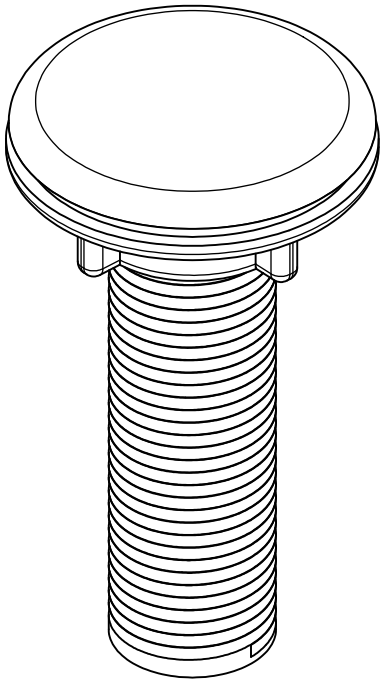

- MOLDED CELCON WILL NOT CHIP OR PEEL
- BLISTER CARD PACKAGING

Jones Stephens Corp.

PHONE NUMBER
1-800-355-6637
FAX NUMBER
1-800-462-6991

SCALE 2.25 : 1
DATE 8-26-11
SHEET 1 OF 1
DRAWN BY ASHLEY KRALOVEC

PART NO.	C06004	C06005	C06006	C06007	C06008	C06011
FINISH	POLAR WHITE	EURO WHITE	BISCUIT	ALMOND	BLACK	CHROME