Electric Actuator • AE-880

Double Acting •Nema 4x • Manual Override



AE-880

Note: 5" of clearance needed to remove cover

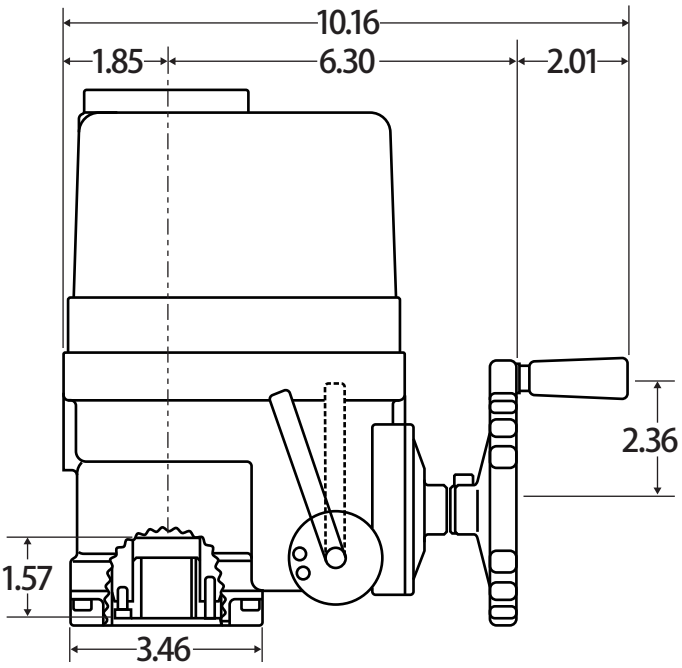

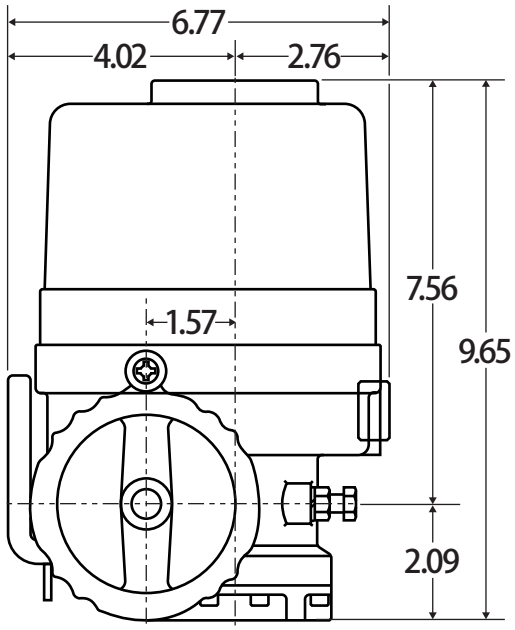

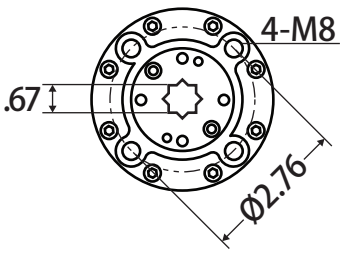

Features

- Hard anodized aluminum hosing with external powder coating for severe duty applications
- Enclosure: IP67, NEMA4 and 4X, O-ring sealed
- ISO 5211 mounting
- 90° operation
- Adjustable mechanical stops to prevent over travel
- Position indicator
- De-clutchable manual override standard
- 120V / 1Ph / 60Hz
- Thermally protected induction motor
- Double worm gearing, no break required
- Spring loaded terminal block for ease in wiring

Actuator Specs	
Torque (in-lbs)	880
Output Square	0.67
ISO 5211 Mounting	F07
IEC Duty Cycle (S2)	Max 20 min
IEC Duty Cycle (S4)	30%, 800 start/hr
Operating Time, 90° @ 120V (secs)	18
Rated current @ 120V (Amp.) (Running/Max)	1.10/1.49
Motor Insulation Class	F
Weight (lbs)	15.4
Limit Switches	2 - 1 ea for Open & Close (10A, 250VAC)
Auxiliary Limit Switches	2 - 1 ea for Open & Close (10A, 250VAC)
Cable Entry	2 - 3/4" NPT
Internal Htr.	Yes - 5W
Temperature Range	-4° F to 158° F
Torque OL Protection	No

© 2016 Jomar Valve • www.jomarvalve.com • P: (586) 268-1220 • F: (586) 979-8315

Electric Actuator • AE-880

Wiring Diagram

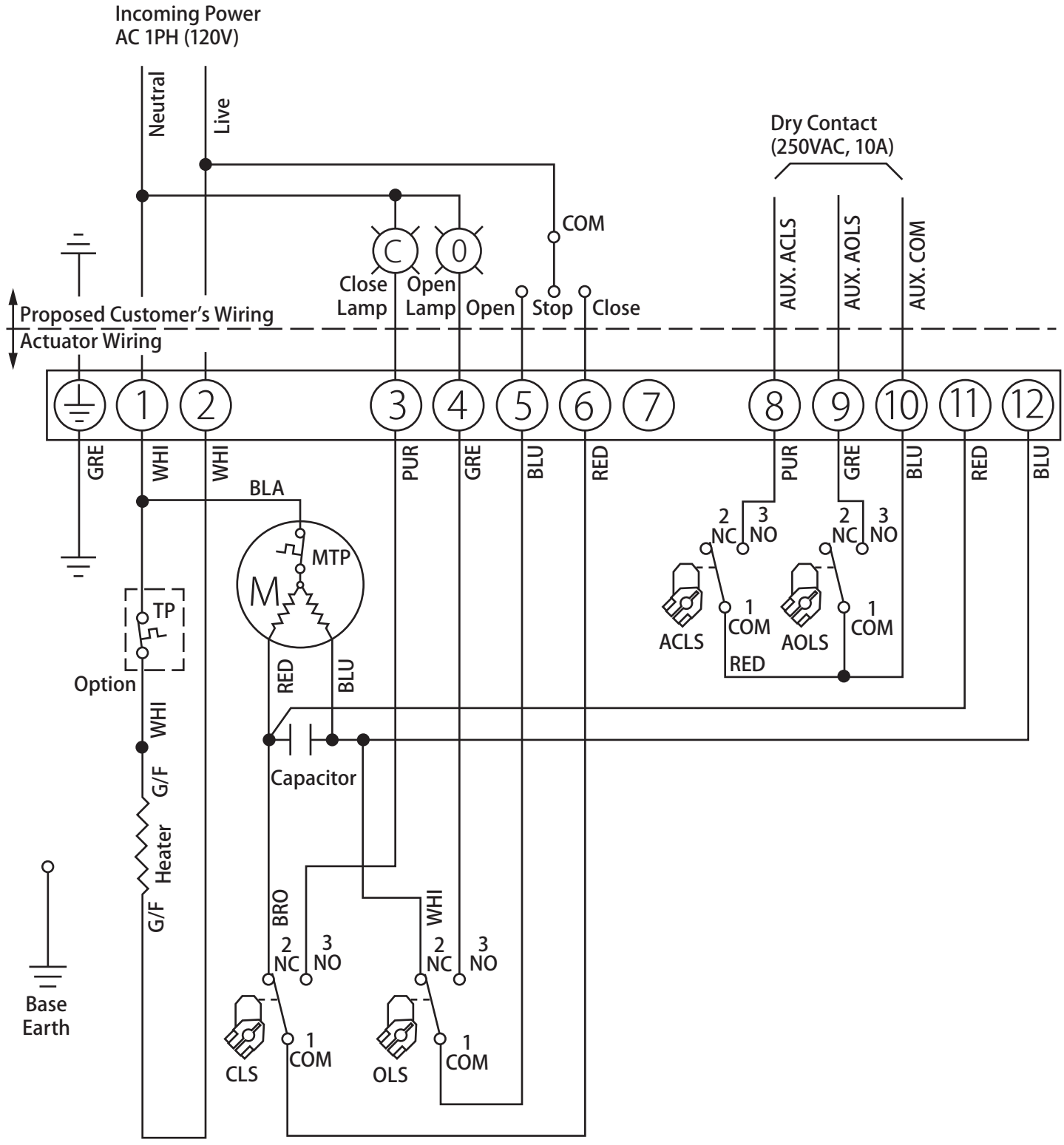

© 2016 Jomar Valve • www.jomarvalve.com • P: (586) 268-1220 • F: (586) 979-8315