Lead Free Brass Boiler Drain

Threaded Male Connection • 125 WOG



T-621G

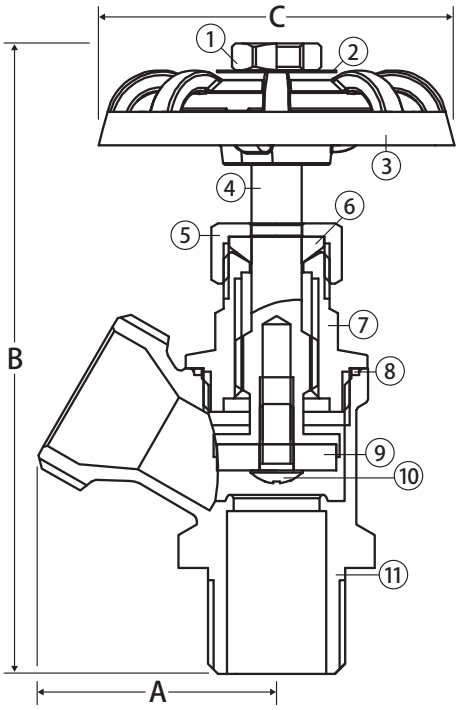

Features

- Manufactured in ISO-9001 facility
- Heavy pattern brass
- Wetted surfaces contain less than .25% lead content

Approvals

- NSF/ANSI 372
- NSF/ANSI 61-8
- NSF/ANSI 14
- Uniform Plumbing Code (cUPC)

Pressure Rating

- 125 WOG

Material Specifications

No.	Part	Materials
1	Handle Nut	Steel
2	Name Plate	Aluminum
3	Hand Wheel	Cast Iron
4	Stem	Lead Free Brass
5	Packing Nut	Lead Free Brass
6	Gland Packing	Buna-N
7	Bonnet	Lead Free Brass
8	Body	Lead Free Brass
9	Seat Packing	Buna-N
10	Seat Screw	SS304 Stainless Steel

Dimensions

Part No.	Size	A	B	C
201-003G	1/2"	1.58	3.59	2.13
201-004G	3/4"	1.58	3.70	2.13

© 2016 Jomar Valve • www.jomarvalve.com • P: (586) 268-1220 • F: (586) 979-8315