FIT-ALL BASKET STRAINER

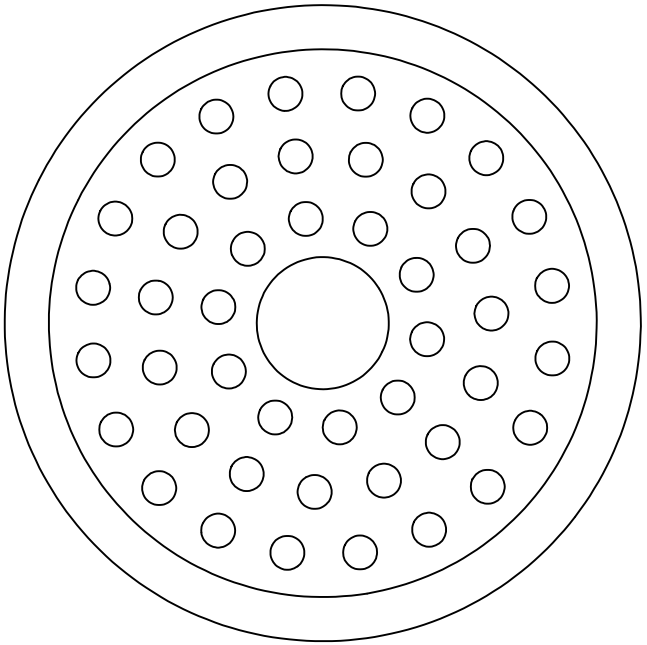

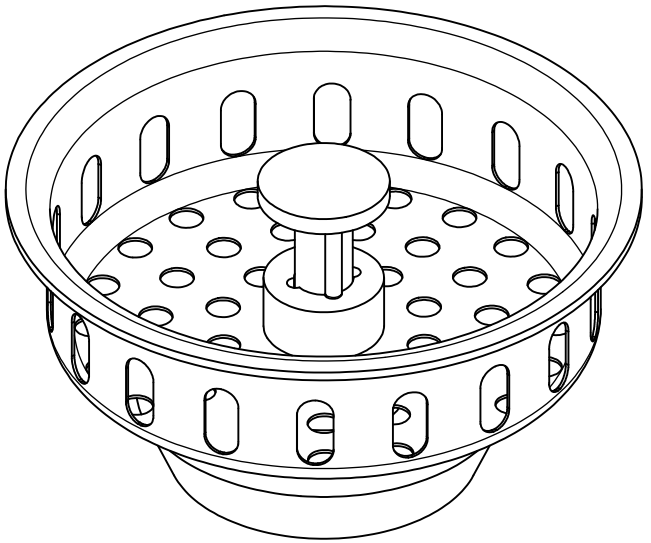

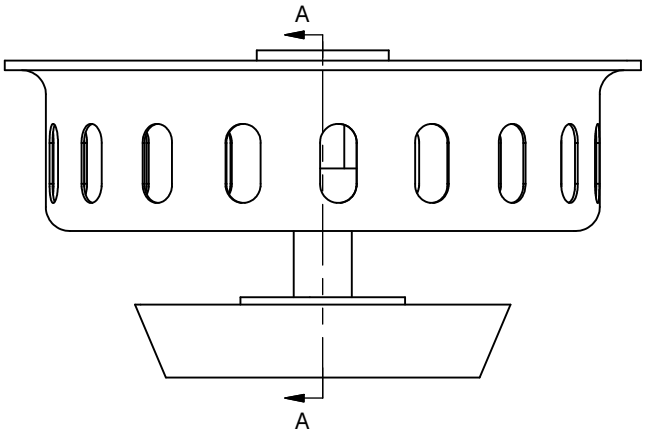

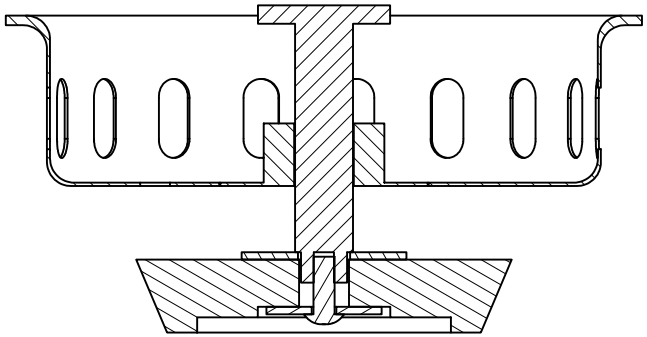

SECTION A-A
SCALE 2

Jones Stephens Corp.

PHONE NUMBER 1-800-355-6637	PART NO.	B03010			
FAX NUMBER 1-800-462-6991	DESCRIPTION	FIT-ALL STRAINER			
SCALE 2 : 1 / DATE 8-05-11					
SHEET 1 OF 1					
DRAWN BY ASHLEY KRALOVEC					