Electric Actuator • AE-700

Double Acting •Nema 4x • Manual Override



AE-700

Note: 1.5" of clearance needed to remove cover

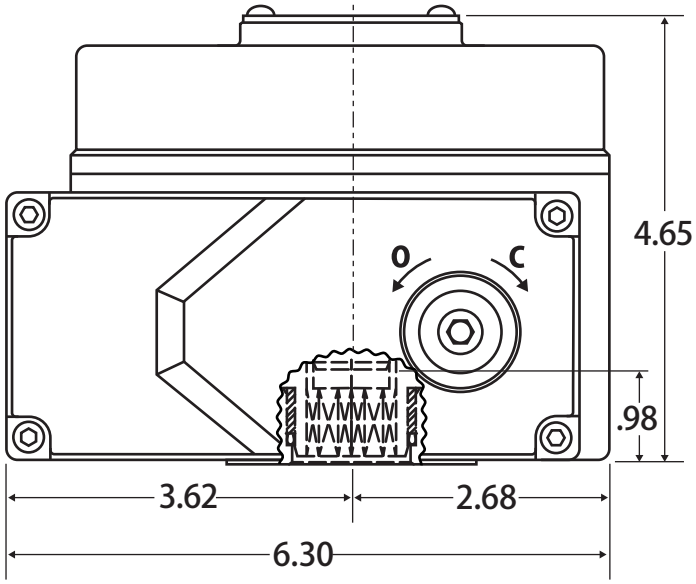

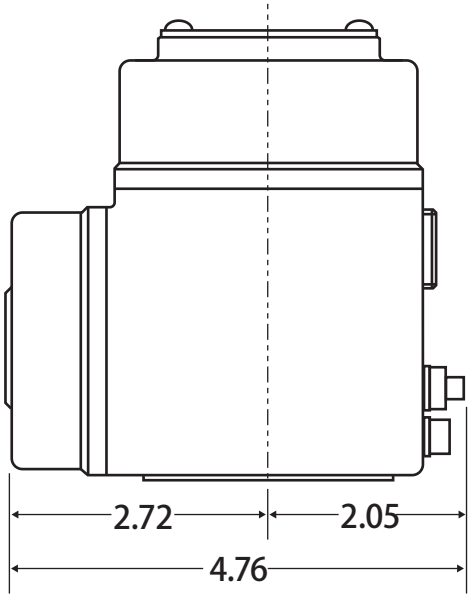

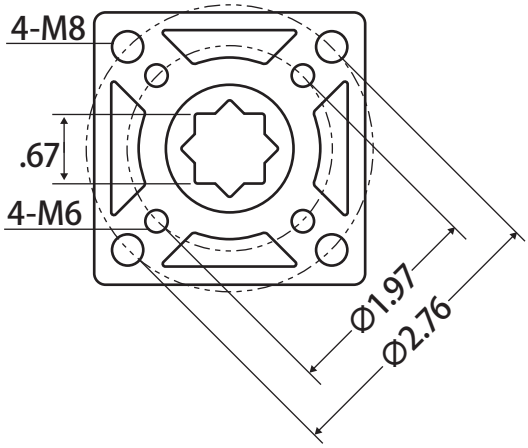

Features

- Hard anodized aluminum hosing with external powder coating for severe duty applications
- Enclosure: IP67, O-ring sealed
- ISO 5211 mounting
- 90° operation
- Adjustable mechanical stops to prevent over travel
- Position indicator
- Manual override standard
- 120V / 1Ph / 60Hz
- Thermally protected induction motor
- Worm gearing, no break required
- Spring loaded terminal block for ease in wiring

Actuator Specs

Torque (in-lbs)	700
Output Square	0.67
ISO 5211 Mounting	F05 / F07
IEC Duty Cycle (S2)	Max 30 min
IEC Duty Cycle (S4)	50%, 1,200 start/hr
Operating Time, 90° @ 120V (secs)	14
Rated current @ 120V (Amp.)	0.97A
Motor Insulation Class	E
Weight (lbs)	7.7
Limit Switches	2 - 1 ea for Open & Close (3A, 250VAC)
Auxiliary Limit Switches	2 - 1 ea for Open & Close (3A, 250VAC)
Cable Entry	2 - 3/4" NPT
Internal Htr.	Yes - 3W
Temperature Range	-4° F to 158° F

© 2016 Jomar Valve • www.jomarvalve.com • P: (586) 268-1220 • F: (586) 979-8315

Electric Actuator • AE-700

Wiring Diagram

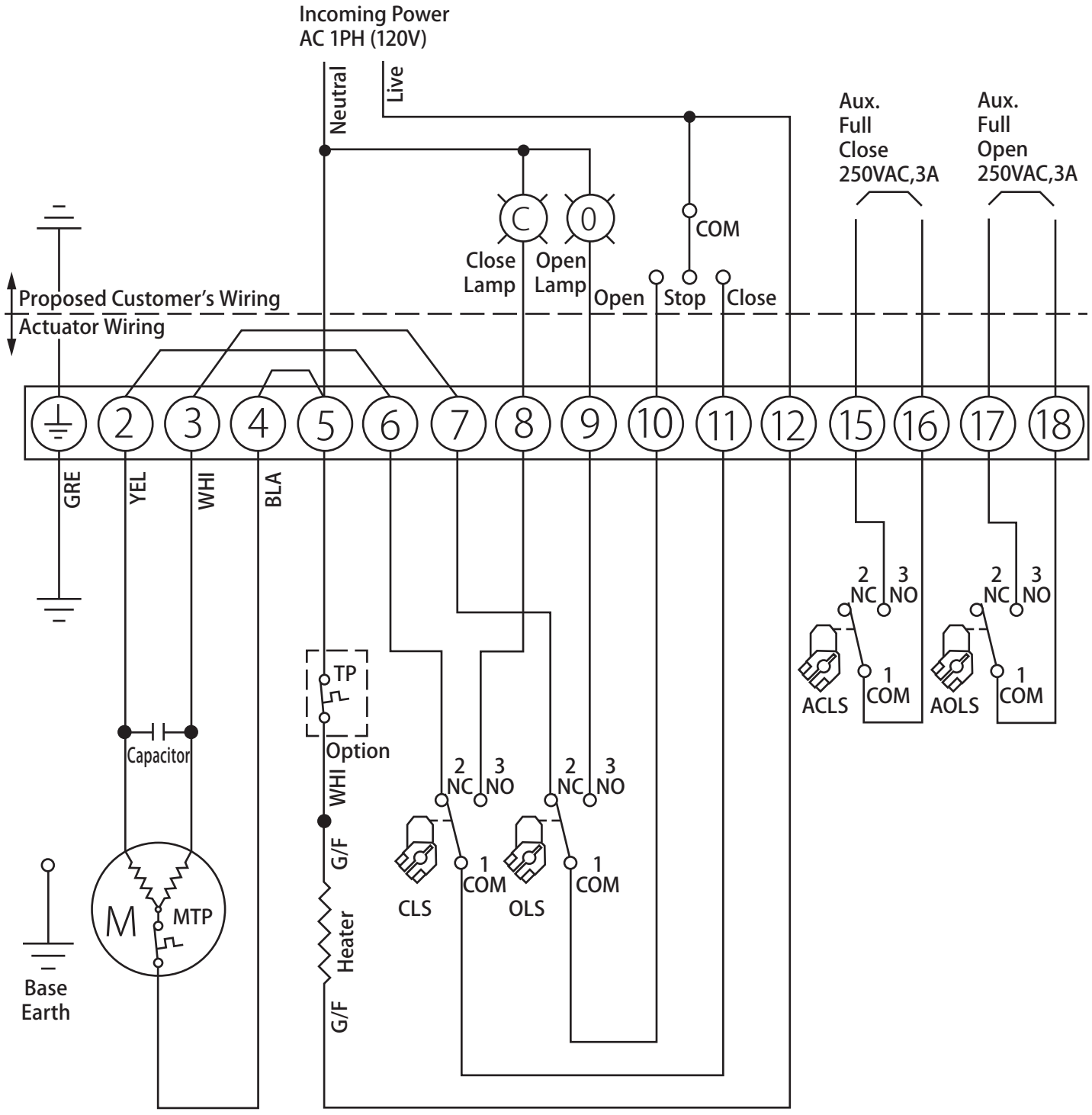

© 2016 Jomar Valve • www.jomarvalve.com • P: (586) 268-1220 • F: (586) 979-8315