Product information

92 22 13

Universal Tweezers





- Universal Tweezers are suitable for demanding standard applications and precision tasks
- Wide range of designs: straight, angled, gripping surfaces and handles smooth or serrated, with needle points, narrow or blunt tips, as well as different lengths
- For the electronics industry, watchmakers and jewellers
- High quality stainless steel: extremely tough and very good corrosion resistance against a variety of atmospheric environments and many corrosive materials
- Stainless steel

General	
Article No.	92 22 13
EAN	4003773054702
Material	stainless steel
Gripping surfaces	smooth gripping surfaces
Weight	21 g
Dimensions	130 x 11 x 14 mm
Reach-konform	no
RohS-konform	no

Technical details	
Surface	matt finish
Finish	straight
Tips width (A)	0.4 mm
Tips width (B)	0.5 mm
Corrosion-resistant	yes
Acid resistance	very good
ESD-tested	no
VDE tested	no
Sectors	Industry electronics
Magnetic	non-magnetisable (80%)

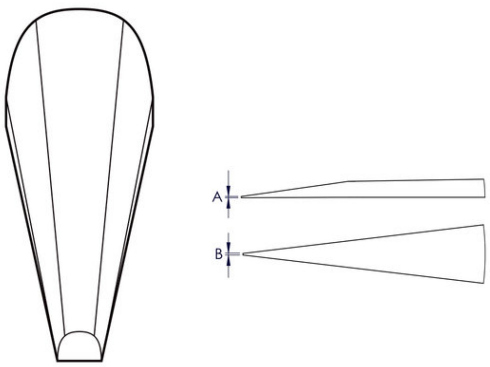

Classification

eCl@ss 5.1.4	21040500
ETIM 5.0	EC000182
ETIM 6.0	EC000182
proficl@ss 6.0	EAB696c019
UNSPSC 13.1	27112105

technical change and errors excepted