# V-WATCH®

## PERSONAL VOLTAGE DETECTOR

## Operating & Instruction Manual




CE U.S. Patents 6,329,924, 9,265,331, and D622,956

***Making the Invisible Visible®***

HD ELECTRIC
HDElectricCompany.com

# V-WATCH®

## PERSONAL VOLTAGE DETECTOR

# Operating & Instruction Manual


GENERAL DESCRIPTION . . . . . .4

POINTS TO UNDERSTAND BEFORE PROCEEDING . . . . . .4

SAFETY . . . . . .5

WARNINGS . . . . . .5

HOW IT WORKS . . . . . .5

HOW TO WEAR IT . . . . . .6

WHEN AND HOW TO USE IT . . . . . .6

A WORD ABOUT ELECTRIC FIELDS . . . . . .7-8

LIMITATIONS FOR USE . . . . . .9

V-WATCH PERSONAL VOLTAGE DETECTOR MODELS . . . . . .10

INSTRUCTIONS FOR USE . . . . . .10-11

TECHNICAL SPECIFICATIONS . . . . . .11-12

WARNING DISTANCES . . . . . .12-13

ACCESSORIES . . . . . .14

TERMS AND CONDITIONS OF SALE . . . . . .16


For the latest information on V-Watch Personal Voltage Detectors including product updates and technical information, visit our website at www.HDElectricCompany.com



## GENERAL DESCRIPTION

The V-Watch Personal Voltage Detectors detect the strong electric fields surrounding high voltage conductors and power distribution equipment. It is a small pocket size device worn on the outside of the clothing or other protective gear by users operating near power lines or high voltage equipment. It provides an extra level of safety for personnel trained in the use and application while working on or near high voltage systems.




**The V-Watch Personal Voltage Detector detects electric fields. Make sure you understand these points before proceeding:**

- Electric fields surround every energized AC conductor.
- The closer you are to a conductor, the stronger the field will be.
- Higher voltage means a stronger electric field and a greater warning distance. Lower voltage means a reduced warning distance.
- Electric fields are NOT blocked by plastics, dry wood or clothing.
- Electric fields ARE blocked by ANY conductor such as a metal cabinet or door, wet wood, metal fences, green trees, a growing shrub or hedge and tall wet grass.
- The detector will not find cables buried under the ground. The ground is a conductor and will block electric fields.
- Insulation on a wire does not block the electric field and does not affect warning distances.
- Underground primary cables are both insulated AND shielded. The shield is a conductor, is grounded, and will block the electric field.
- Molded cable terminators such as elbows are, like the cables they are installed on, both insulated and shielded and will block electric fields.
- Your body will block electric fields. Wear the detector front and center and do not walk backwards.
- Do not use the detector while holding it in your hand. Wrapping your fingers around the device will block electric fields, preventing it from working properly.

## SAFETY

- Always use proper high voltage procedures, including personal protective equipment, when working near or around high voltage equipment or conductors.
- Do not rely on the detector as your sole source of high voltage detection. Risk of electrocution is inherent in or around high voltage.
- Never contact high voltage with the detector.
- Always use proper high voltage procedures for testing and grounding.
- Because the human body is a good electrical conductor, electric fields are distorted or blocked by the body. Thus, positioning of the detector on the body and its location relative to the voltage source can have a large effect on its sensitivity to electric fields.
- Grounded equipment can appear to be live in close proximity to energized conductors.
- The V-Watch Personal Voltage Detector is not sensing electric fields when it is inside its closed carrying case.

## WARNINGS



**All V-Watch Personal Voltage Detector carrying cases are electrically shielded, therefore, the device does not work when inside its closed carrying case.**



**NOT FOR USE BELOW 2400 VOLTS AC.**

## OPERATIONAL IMPAIRMENT

If the detector is used in a manner not described in this instruction manual, the protection and effective operation of this equipment may be impaired.

The detector will not detect DC voltage or stored charge such as in charged capacitors or underground cable. When the detector is inside its closed case, it will not detect or warn of nearby high voltage. Always use proper high voltage procedures, including personal protective equipment, when working near or around high voltage equipment or conductors. Never contact high voltage. Always use proper high voltage procedures for testing and grounding. Do not rely on the V-Watch Personal Voltage Detector as your sole source of high voltage detection. Risk of electrocution is inherent in or around high voltage.

## HOW IT WORKS

The V-Watch Personal Voltage Detector works by sensing the presence of the electric field surrounding anything that potentially conducts high voltage electricity and sounds an alarm. It measures the strength of the electric field; a higher voltage or stronger field will cause the detector to alarm from a greater distance.

It emits a series of loud beeps and flashing lights when an electric field is first detected. The beeps and flashing lights increase in frequency as the user approaches the source of the high voltage electric field. A steady tone indicates very close proximity to high voltage and the need for extreme caution. This variable beeping rate helps the user to determine if they are approaching the high voltage source or moving away from it to safety.

The detector has a self-test button to verify battery power and proper functioning of the device. It will also sound an alarm to warn the user of a low battery. Whenever the detector is being used, it is always on, checking for the presence of high voltage electric fields. A standard 9-volt alkaline battery powers the unit for about one year.

For more information, refer to the A Word About Electric Fields section on page 7.

## HOW TO WEAR IT

The V-Watch Personal Voltage Detector should always be worn mid-torso on the front of the body and face in the direction of movement. Because it is sensitive to electric fields in front of the user, and to a lesser extent on either side, proper positioning is important.

**V-Watch Personal Voltage Detectors can be worn in three different ways:**

1. When using the detector with the C-10 Case Lanyard, fully unzip the carrying case so that the case opens downward and the detector is now facing forward. Extend the lanyard from the top of the case and hang it around your neck. Adjust the lanyard so the detector in the case is located at mid-torso and facing forward.
2. When using the detector with the VW-LAN Lanyard, remove the detector from its case and securely affix it using the metal clip on the back of the detector to the hanging loop on the front of the lanyard. Hang the lanyard around your neck and adjust by using the Velcro so the detector is located at mid-torso and facing forward.
3. The last option is using the detector with the metal mounting clip and securing it on clothing or other devices such as fall protection gear so it is located at mid-torso and facing forward.

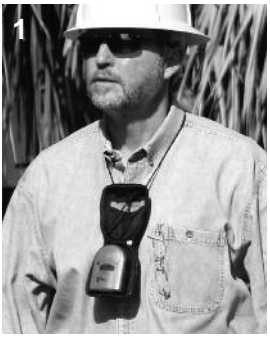








## WHEN AND HOW TO USE IT

The V-Watch Personal Voltage Detector can be used anytime, anyplace and for any reason. The decision of when to use it is made by the user and by your company's safety and work practices.

When used properly, the detector can provide an additional warning to users exposed or working around energized high voltage electricity and equipment. Awareness of the presence of a high voltage electric field allows the user to take additional precautions against accidental contact with energized equipment. The variable frequency beeping gives the user an indication of the source and direction of the high voltage.

The detector provides an early warning of the proximity of potentially hazardous high voltage electricity and equipment. It will start to beep slowly as an electric field s first detected and will then beep faster, increasing to a steady tone if the user continues to approach the source of the high voltage electric field. A steady tone indicates the need for extreme caution, as the source of the high voltage electric field is close.



## A WORD ABOUT ELECTRIC FIELDS

Electric fields surround every energized conductor. The V-Watch Personal Voltage Detector measures the strength of these electric fields to warn the user when fields are strong enough to indicate the presence of nearby high voltage conductors.

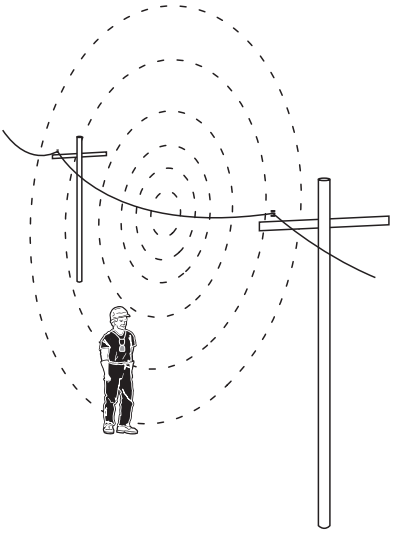

A downed power line is a typical hazardous situation where the detector can provide a warning. This power line lying on the ground sets up a high voltage field surrounding the conductor that the detector will sense and warn the user.

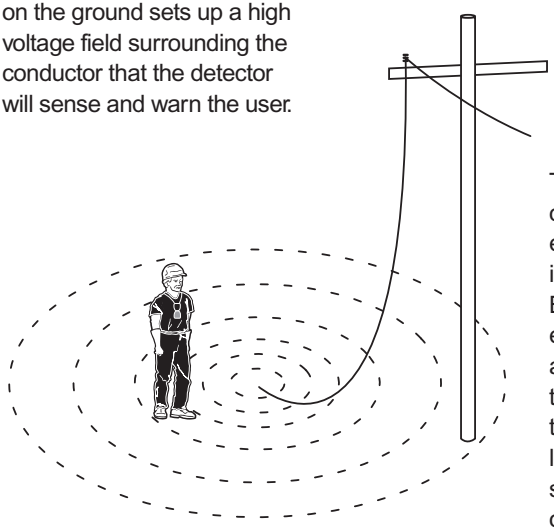

The detector is designed to be worn on the body and it measures the electrical fields typically found in close proximity to the body. Because the human body is a good electrical conductor, electric fields are distorted or even blocked by the body. Thus, positioning of the detector on the body and its location relative to the voltage source can have a large effect on its sensitivity to electric fields.

When properly worn on the front of the body, as shown, and with the user facing a waist height energized conductor, such as a terminal on a pad mount transformer or switch, the detector will start to alarm about 10 feet from a 7kV conductor. If the user were to approach this energized terminal by backing up to it, the warning distance may be reduced to 3 feet or less.

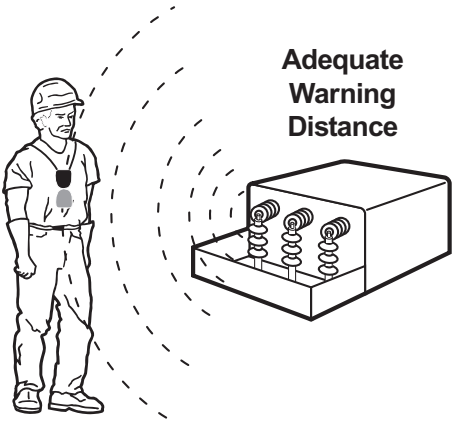

If the user bends over from the waist to reach towards an energized high voltage terminal, the warning distance may also be significantly reduced. In both cases, the high conductivity of the body acts as a shield to conduct the electric field around the detector.

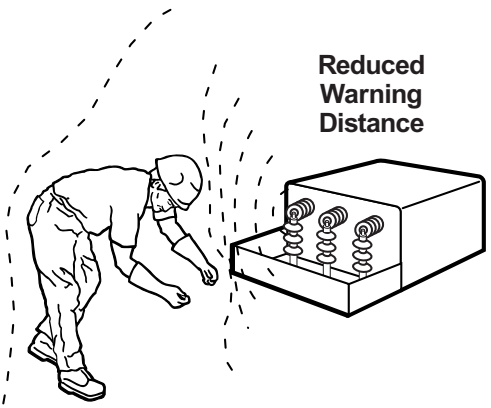


The V-Watch Personal Voltage Detector measures only the strength of the electric field. It cannot directly measure distance to the source of the electric field such as an energized conductor. The higher the voltage, the stronger the field and the greater the alarm distance. The reverse is also true; the detector may alarm due to the very close proximity of low voltage when the user walks past a typical factory machine such as a running drill press, an office computer terminal or a desk lamp. It may even alarm if it is placed up against a typical 120 volt wall outlet.

Electrically conductive objects located underneath power lines can appear to be live. A metal fence or a growing hedge can cause a distortion of the electric field under these lines and result in high electric field strength near the ground. The V-Watch Personal Voltage Detector will provide an early warning of high electric fields, but not all fields are directly caused by nearby energized objects. To prevent the detector from issuing too many false alarms, it should not be used or worn in typical office or factory environments where all the equipment is low voltage and there is no danger of contacting energized high voltage conductors.

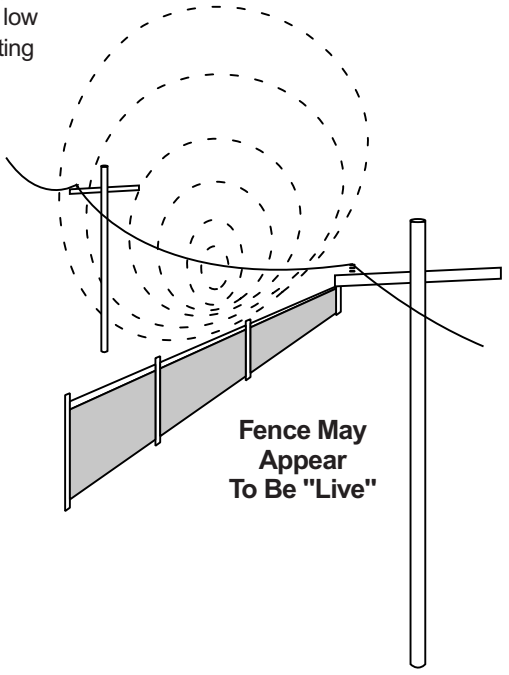


As an additional protection against false alarms from transient voltages, the detector has a built-in time delay and may take up to one second to emit an alarm warning of high voltage. For this reason, a user running towards an energized high voltage source may find the warning distance reduced.

## LIMITATIONS FOR USE

**WARNING: Conductors lying on the ground or very close to it will result in reduced warning distances.**

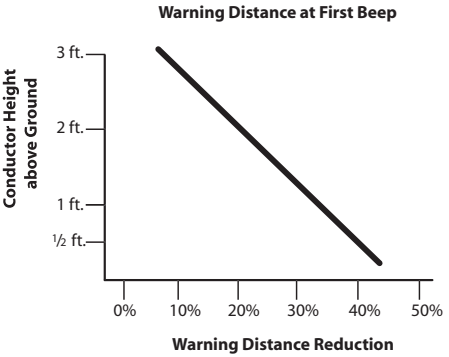


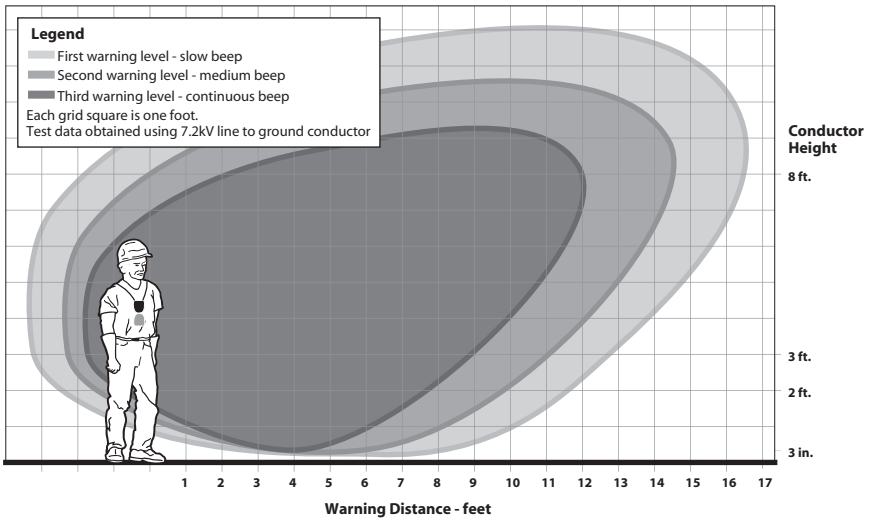


Conductors of different phases in close proximity will also reduce warning distances due to field cancellation effects.

Wearing the V-Watch Personal Voltage Detector in environments such as substations or under transmission lines may result in the detector alarming continuously.

Be aware of unique conditions that may be present around three phase delta systems. Unlike grounded Y systems, a single phase of a delta system can become grounded without causing an outage and the delta system can continue to operate with this grounded phase. If this phase is grounded as a result of a downed conductor or other storm damage, it may be grounded only temporarily and could become reenergized if moved or disturbed. **The V-Watch Personal Voltage Detector will not detect any grounded conductor, whether it is a grounded delta phase conductor, a guy wire or a pole ground.**

**WARNING: Treat all conductors as live unless or until there is a visible break from a live source and a ground is in place.**

## V-WATCH PERSONAL VOLTAGE DETECTOR MODELS

There are two models available of the V-Watch Personal Voltage Detector. Both feature audible and visual alarms, a low battery indicator, built-in self-test, field replaceable 9V battery, ruggedized housing, belt clip and carrying case.

The Pro version includes all of the same features, but also includes a Mute button which temporarily silences the beeper. The Mute feature may be used when it is necessary to work for a prolonged period in or around high voltage electricity while wearing the detector.

## INSTRUCTIONS FOR USE

**NOT FOR USE BELOW 2400 VOLTS AC.**

Before using, read the instruction manual, review product labeling and both sides of the instruction card located in the case. Do not proceed if the instruction card is missing. Make certain that the detector is equipped with a 9-volt battery. Press the Test button on the front of the detector before and after each use. The test circuitry generates an internal voltage which the detector then detects by turning on the lights and sounding the beeper. DO NOT USE the detector if the Test button fails to activate the lights and beeper. Remove from service and contact the factory to arrange for repair.

**CAUTION – Press and hold the Test button before and periodically during as well as after each use to ensure proper operation.**

The detector should always be worn facing any potential high voltage electricity. Wear the detector in the center of the front of your body as shown in the illustration and always wear in the direction of movement or work. Do not walk backwards or sideways when wearing the detector as it will not detect high voltage behind you or as effectively to the sides. Wear on the outside of all clothing. Keep it away from all other large metal objects such as belt buckles, tool belts or electronic items such as radios, pagers, cell phones or any other electrical devices which may interfere with the detector.

The detector will emit a series of beeps and flashing lights when it detects high voltage. It will beep and flash faster as it gets closer to high voltage. Very rapid beeping and flashing or a steady tone and lights indicates close proximity to high voltage and requires extreme caution. For more details, refer to Warning Distances beginning on page 12.

Instruction Cards - Front & Back

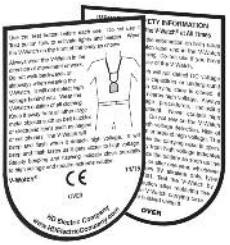

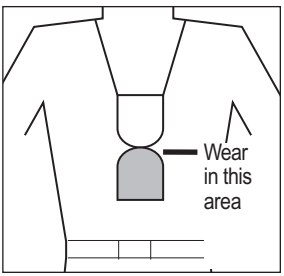







The V-Watch Pro model includes an added mute feature. The Mute button temporarily silences the beeper. This feature may be used when it is necessary to work for a prolonged period in or around high voltage conductors. The Mute will operate only if activated during a warning beep or a few seconds after a warning beep has occurred. While the beeper is Muted, the lights will continue to flash. The Mute can be canceled by pressing the Test button. Use the Mute with extreme caution as high voltage is nearby. After 3 to 5 minutes, the Mute function is canceled and the detector returns to normal alarm operation.

When the V-Watch Personal Voltage Detector is in use with a good working battery, it is always on, always ready to warn of potentially hazardous high voltage. The battery life is approximately one year on the job or two years in storage. When the job requiring the protection of the detector for the user is completed, the detector should be closed inside its protective carrying case. The carrying case is electrically shielded and turns the V-Watch detector off when it is stored inside.



**CAUTION: The V-Watch Personal Voltage Detector is not sensing electric fields when it is inside its closed carrying case.**

The V-Watch Personal Voltage Detector will indicate if it has a low battery. When the battery gets low the beeper and lights are activated. The beeper will give a constant tone and the lights remain lit indicating the battery needs to be replaced (the same indication as pressing the Test button). The low battery signal will continue until the battery is completely discharged or removed. When this happens, the detector is no longer operational until the 9-volt battery is replaced.

To replace the battery, completely remove the detector from the case and access the battery through the door on the back. Disconnect and dispose of the old battery, replacing it with a fresh, new 9-volt alkaline battery. Be sure to connect the proper battery polarity and carefully manage the wire leads to avoid pinching between the battery door and the body while replacing the cover. Press and hold the Test button to confirm proper operation. If after changing the battery the test button fails to confirm proper operation, DO NOT USE. Remove it from service and contact the factory to arrange for repair.

## CLEANING

To clean, wipe with a damp cloth with water. Do not use harsh chemicals or solvents.

## TECHNICAL SPECIFICATIONS

**SENSITIVITY:** Factory set at 50/60 Hz sensing threshold (first beep).
The detector will only detect AC voltage. Do not use below 2400 Volts.

**TYPICAL WARNING DISTANCE:** 7 feet (2.13m) from a 4kV AC conductor.
For more details, refer to Warning Distances beginning on page 12.

**OPERATING FREQUENCY:** 50Hz/60Hz

**BATTERY:** 9V alkaline 1604A, IEC 6LR61. Life 2 years in storage, one year typical usage.

**BEEPER SOUND PRESSURE LEVEL:** 100 db.

**WEIGHT WITH BATTERY:** 5.2 oz (147g)

**DIMENSIONS:** 3.5” (8.89cm) x 2.8” (7.32cm) x 1.2” (3.18cm)

**VOLTAGE RANGE:** 2400VAC and above.

**ENCLOSURE MATERIAL:** ABS UL 94-HB

**PRINTED CIRCUIT BOARDS:** FR-4 UL94V-0

## ENVIRONMENTAL CONDITIONS

**CONDITIONS:** Indoor and outdoor use
**ALTITUDE:** Up to 6,566 ft. (2000M)
**OPERATING TEMPERATURE:** -20°F to +120°F (-29°C to +49°C)
**HUMIDITY:** 95% to 49°C (non-condensing)
**OVERVOLTAGE CATEGORY:** II Non-contact
**POLLUTION DEGREE:** PD4

## REPAIRS

If any damage is found please contact us at 800-435-0786 to arrange for service.

## MANUFACTURING LOCATION

HD Electric • Southaven, MS, 38672 USA

## WARNING DISTANCES

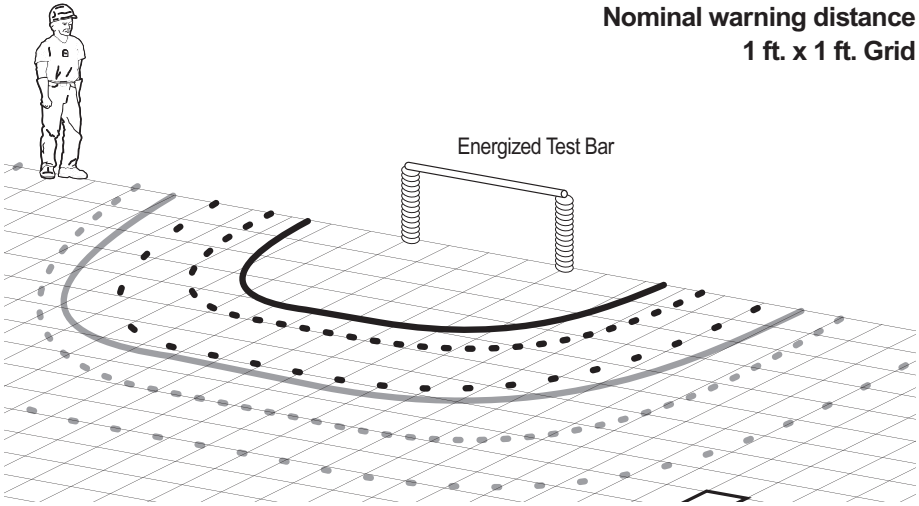


### Test Details

All of the warning distances are shown on a 1 foot grid and all distances are to scale.

The energized bar is 4 feet long and 30 inches above the ground on insulators. It is energized from behind and the indicated voltage is line to ground.

**Voltage: 2.4kV Line-Ground**

| Location | Slow Beep | Fast Beep | Continuous |
|---|---|---|---|
| Side of Bar | 7 ft. | 5 ft. | 4 ft. |
| End of Bar | 5 ft. | 3.5 ft. | 2.5 ft. |

**Test Voltage 7.2kV Line-Ground**

| Location | Slow Beep | Fast Beep | Continuous |
|---|---|---|---|
| Side of Bar | 11 ft. | 9 ft. | 7 ft. |
| End of Bar | 10 ft. | 7 ft. | 6 ft. |

For this test, the V-Watch Personal Voltage Detector VW-20/VWP-20 was worn on the shirt front as pictured. Warning distances will be reduced slightly if it is worn on the belt and will be reduced substantially if an arm is extended toward the energized source or if the user approaches the energized source backwards.

**Nominal warning distance 1 ft. x 1 ft. Grid**

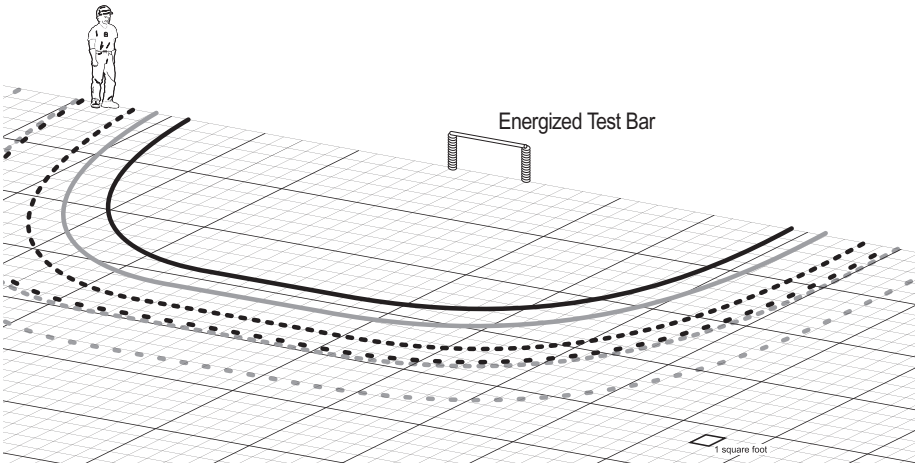


## Test Details

All of the warning distances are shown on a 1 foot grid and all distances are to scale.

The energized bar is 4 feet long and 30 inches above the ground on insulators. It is energized from behind and the indicated voltage is line to ground.

For this test, the V-Watch Personal Voltage Detector model VW-20/VWP-20 was worn on the shirt front as pictured. Warning distances will be reduced slightly if it is worn on the belt and will be reduced substantially if an arm is extended toward the energized source or if the user approaches the energized source backwards.

**Voltage: 14.4kV Line-Ground**

| Location | Slow Beep | Fast Beep | Continuous |
|---|---|---|---|
| Side of Bar | 20 ft. | 18 ft. | 14 ft. |
| End of Bar | 20 ft. | 18 ft. | 14 ft. |

**Test Voltage 19.9kV Line-Ground**

| Location | Slow Beep | Fast Beep | Continuous |
|---|---|---|---|
| Side of Bar | 23 ft. | 20 ft. | 16 ft. |
| End of Bar | 23 ft. | 20 ft. | 16 ft. |

## ACCESSORIES

V-Watch Personal Voltage Detectors come standard with a C-10 Case Lanyard, a 9-volt battery, instruction card and instruction manual.

### VW-LAN Lanyard and Neck Strap

Adjustable lanyard allows the detector to be worn around the neck and positions unit at mid-chest level. Color is safety orange.



**VW-LAN LANYARD AND NECK STRAP**

### VW-K-BAG Carrying Bag

Safety orange zippered carrying bag (included in kits). Holds detector in case, VW-LAN lanyard and instruction manual.




**VW-K-BAG CARRYING BAG**

### Carrying Case Lanyards

Two versions available – can be used with any model

- C-10FR Carrying Case Lanyard – high-visibility safety green shielded material with an outer layer of flame resistant material
- C-10 Carrying Case Lanyard – black shielded material

**C-10 CARRYING CASE LANYARDS**



# TERMS AND CONDITIONS OF SALE

HD Electric Company is herein referred to either as "HDE" or "Seller" and the customer or person or entity purchasing goods or services (hereinafter collectively referred to as "Goods") is referred to as the "Buyer". These Terms and Conditions, any price list or schedule, quotation, acknowledgment or invoice from HDE relevant to the sale of the Goods and all documents incorporated by specific reference therein, constitute the complete and exclusive statement of the terms of the agreement governing the sale of Goods by HDE to Buyer. Buyer's acceptance of the Goods will manifest Buyer's assent to these terms and conditions without variation or addition. Any different or additional terms in Buyer's purchase order or other Buyer documents are hereby objected to. HDE reserves the right in its sole discretion to refuse orders.

**1. PRICES AND TAXES:** Unless a fixed price is quoted, the price at which this order is accepted is subject to adjustment to HDE's price in effect at the time of order. Any current or future tax or governmental charge (or increase in same) affecting Seller's costs or production, sale or delivery or which Seller is otherwise required to pay or collect in connection with the sale, purchase, delivery, storage, processing, use or consumption of Goods (but excluding any tax on Seller's net income or profit) shall be for Buyer's account and shall be added to the price.

**2. TERMS OF PAYMENT:** Terms are stated on HDE's invoice in U.S. currency. HDE shall have the right, among other remedies, either to terminate this agreement or to suspend further performance under this and/or other agreements with the Buyer in the event Buyer fails to make any payment when due, which other agreements Buyer and Seller hereby amend accordingly, or HDE otherwise deems itself insecure. Buyer shall be liable for all expenses, including attorneys' fees, relating to the collection of past due amounts. Should Buyer's financial responsibility become unsatisfactory to HDE, cash payments or security satisfactory to HDE may be required by HDE for future deliveries and for the goods theretofore delivered. If such cash payment or security is not provided, in addition to HDE's other rights and remedies, HDE may discontinue deliveries. HDE may apply a finance charge for payments made by credit card.

**3. SHIPMENT AND DELIVERY:** Unless otherwise expressly provided, shipments are made F.O.B. HDE's shipping point. Risk of loss or damage and responsibility shall pass from HDE to Buyer upon delivery to and receipt by common carrier. Any claims for shortages or damages suffered in transit are the responsibility of Buyer and shall be submitted by the Buyer directly to the carrier. Shortages or damages must be acknowledged and signed for at the time of delivery. While HDE will use all reasonable commercial efforts to maintain the delivery date(s) acknowledged or quoted by HDE, all shipping dates are approximate and not guaranteed. HDE reserves the right to make partial shipments. HDE, at its option, shall not be bound to tender delivery of any Goods for which Buyer has not provided shipping instructions. If the shipment of the Goods is postponed or delayed by Buyer for any reason, Buyer agrees to reimburse HDE for any and all handling and storage costs and other additional expenses resulting therefrom. All claims for shipping errors, lost shipments or any other discrepancies must be made within ninety (90) days or they will be disallowed and deemed waived.

**4. HDE LIMITED WARRANTY:** HDE covers its products with a manufacturer's warranty against defects in material or workmanship for a period of ten years in the case of Capacitor Controls and in all other circumstances for a period of one year, unless otherwise stated by HDE in writing. To take advantage of this warranty, the complete product must be delivered prepaid to HDE or any HDE Authorized Service Center. This warranty shall not apply to any Goods including but not limited to products which: (a) Have been repaired or altered outside HDE's factory (or Authorized Service Center) or in any manner so as, in HDE's judgment, to affect its serviceability or proper operation; (b) Have been subjected by persons other than HDE (or Authorized Service Center) to improper handling, operation, maintenance, repair or alteration; and, (c) Have been subjected to normal wear and tear, misuse, negligence, improper installation or accident. HDE's obligation under this warranty, and the Buyer's exclusive remedy for the breach thereof, shall be limited to, at HDE's option, repair or replacement of any allegedly defective Goods or issuance of credit. HDE requires the return of any allegedly defective Goods, transportation prepaid, before honoring any claim. All returned Goods are subject to inspection, and if examination does not disclose any defect covered by this warranty, replacement of such Goods or issuance of credit for same will not be approved. THE FOREGOING CONSTITUTES HDE'S SOLE WARRANTY RESPONSIBILITY AND BUYER'S EXCLUSIVE REMEDY WHETHER SOUNDING IN TORT, CONTRACT, STRICT LIABILITY OR OTHERWISE, EXCEPT AS OTHERWISE EXPRESSLY SET FORTH IN THIS AGREEMENT. THERE ARE NO OTHER WARRANTIES, EXPRESS OR IMPLIED, WHETHER OF MERCHANTABILITY, FITNESS FOR A PARTICULAR PURPOSE, OR OTHERWISE. No employee, agent, dealer, or other person is authorized to give any warranty on behalf of HDE. This warranty extends only to persons or organizations who purchase the Goods from HDE for resale.

**5. LIMITATION OF REMEDY AND LIABILITY: THE SOLE AND EXCLUSIVE REMEDY FOR BREACH OF ANY WARRANTY HEREUNDER SHALL BE LIMITED TO REPAIR, CORRECTION, REPLACEMENT OR CREDIT UNDER SECTION 4. HDE SHALL NOT BE LIABLE FOR DAMAGES CAUSED BY DELAY IN PERFORMANCE, AND IN NO EVENT, REGARDLESS OF THE FORM OF THE CLAIM OR CAUSE OF ACTION (WHETHER BASED IN CONTRACT, INFRINGEMENT, NEGLIGENCE, STRICT LIABILITY, OTHER TORT OR OTHERWISE), SHALL HDE'S LIABILITY TO BUYER AND/OR ITS CUSTOMERS EXCEED THE PRICE PAID BY BUYER FOR THE SPECIFIC GOODS GIVING RISE TO THE CLAIM OR CAUSE OF ACTION, AND BUYER SHALL INDEMNIFY HDE FOR ANY DAMAGES IN EXCESS THEREOF. BUYER AGREES THAT IN NO EVENT SHALL HDE'S LIABILITY TO BUYER AND/OR ITS CUSTOMERS INCLUDE SPECIAL, INDIRECT, INCIDENTAL, CONSEQUENTIAL OR PUNITIVE DAMAGES OF ANY CHARACTER IN CONNECTION WITH THE SALE, RESALE OR USE OF THE GOODS, WHICH ARE WAIVED BY BUYER AND AS TO WHICH BUYER SHALL INDEMNIFY HDE.** The term "consequential damages" shall include, but not be limited to, loss of anticipated profits, business interruption, loss of use of revenue, cost of capital or loss of or damage to property, equipment, or data, or loss of reputation. Further, Buyer shall indemnify and hold HDE harmless from any liability to Buyer, Buyer's employees, workers, contractors or any other persons arising out of Buyer's, and any other persons', use of the Goods. All instructions and warnings supplied by HDE will be passed on to those persons who use the Goods. HDE's Goods are to be used in their recommended applications and all warning labels adhered to the Goods by HDE shall be left intact. It is impossible to eliminate all risks associated with the use of the Goods. Risks of serious injury or death, including risks associated with electrocution, arcing and thermal burns, are inherent in work in and around energized electrical systems. Such risks arise from the wide variety of electrical systems and equipment to which Goods may be applied, the manner of use or application, weather and environmental conditions or other unknown factors, all of which are beyond the control of HDE. HDE does not agree to be an insurer of these risks, and shall have no liability for any claims arising from such risks. WHEN YOU BUY OR USE THESE PRODUCTS, YOU AGREE TO ACCEPT THESE RISKS.

**6. EXCUSE OF PERFORMANCE (FORCE MAJEURE):** HDE shall not be liable for delays in performance or for non-performance due to acts of God; acts of Buyer; war; fire; flood; weather; sabotage; strikes, labor disputes, civil disturbances or riots; governmental requests, restrictions, allocations, laws, regulations, orders or actions; unavailability of or delays in transportation; default of suppliers; or unforeseen circumstances or events beyond HDE's reasonable control. Deliveries or other performance may be suspended for an appropriate period or cancelled by HDE upon notice to Buyer in the event of any of the foregoing, but the balance of this agreement shall otherwise remain unaffected. If HDE determines that its ability to supply the total demand for the Goods, or to obtain material used directly or indirectly in the manufacture of the Goods, is hindered, limited or made impracticable due to causes set forth herein, HDE may allocate its available supply of the Goods or such material (without obligation to acquire other supplies of any such Goods or materials) among itself and its purchasers on such basis as HDE determines to be equitable without liability for any failure of performance which may result therefrom.

**7. CHANGES:** HDE reserves the right to change designs and specifications for standard Goods without prior notice to Buyer, but not with respect to custom Goods being made for Buyer. HDE shall have no obligation to install or make such change in any Goods manufactured prior to the date of such change.

**8. ASSIGNMENT:** Buyer shall not assign its rights or delegate its duties hereunder or any interest herein without the prior written consent of HDE, and any such assignment, without such consent, shall be void.

**9. INSTALLATION:** Buyer shall be responsible for receiving, inspecting, testing, storing, installing, starting up and maintaining all Goods.

**10. INSPECTION/TESTING:** Buyer, at its expense, agrees that it will promptly inspect the Goods upon receipt thereof, and in no event later than thirty (30) days from the date of receipt of the Goods. Buyer shall deliver to HDE within fifteen (15) days of inspection, but in no event later than forty-five (45) days from the date of receipt of the Goods, written notice of any and all deficiencies, defects, variations from specifications or complaints of any kind with respect to the quantity, quality, condition, shipment, performance, price or appearance of the Goods so received by Buyer. In the event no such written notice is received by HDE, Buyer shall be deemed conclusively to have inspected and accepted all such Goods unconditionally and to have waived any and all rights and claims, including without limitation any right to reject the Goods or to claim damages in respect thereof. Buyer may not return goods without first advising HDE of the reasons therefore, obtaining from HDE a material authorization number and observing such instructions as HDE may give in authorizing such return. In the event a return is authorized by HDE, a restocking for any Goods requiring repackaging or maintenance a twenty percent (20%) restocking fee shall be assessed to Buyer in the final credit amount.

**11. SERVICES:** If this agreement requires HDE to perform or provide any services, HDE (including without limitation its successors, assigns, agents or any person or entity acting at HDE's direction) shall not be responsible for any damages, claims, liabilities or expenses of any nature arising out of such services.

**12. U.S. EXPORT CONTROL LAWS:** All Goods sold to Buyer by HDE hereunder are subject to U.S. Export Control Laws. Buyer hereby agrees not to re-sell or divert any goods contrary to such laws.

**13. COMPLIANCE:** Seller/Contractor shall comply with all applicable federal, state or local laws, rules, regulations, or orders. Seller/Contractor shall comply with Executive Order 11246, as amended by Executive Order 11375, and the applicable provisions of the Office of Federal Contract Compliance Programs (OFCCP), 41 CFR Part 60, which are incorporated herein by this reference. Buyer shall comply with all applicable federal, state, or local laws, rules, regulations or orders including but not limited to the Foreign Corrupt Practices Act of 1977, as amended. HDE reserves the right to delay or refuse delivery if requests for reasonable assurances of Buyer's compliance are not tendered as requested.

**14. MISCELLANEOUS:** These terms and conditions supersede all other communications, negotiations and prior oral or written statements regarding the subject matter hereof. No change, modification, rescission, discharge, abandonment, or waiver of these terms and conditions shall be binding upon HDE unless made in writing and signed on its behalf by its duly authorized representative. No conditions, usage or trade, course of dealing or performance, understanding or agreement purporting to modify, vary, explain, or supplement these terms and conditions shall be binding unless hereafter made in writing and signed by Seller. No modification shall be effected by HDE's receipt or acceptance of Buyer's purchase orders, shipping instruction forms, of other documentation containing terms at variance with or in addition to those set forth herein, all of which are objected to by HDE. Any such modifications or additional terms are specifically rejected by HDE. No waiver by HDE with respect to any breach or default of any right or remedy and no course of dealing, shall be deemed to constitute a continuing waiver of any other breach or default of any other right or remedy, unless such waiver be expressed in writing and signed by HDE. All typographical or clerical errors made by HDE in any quotation, acknowledgment or publication are subject to correction. Validity and performance relating to the interpretation and effect of this agreement shall be governed by the laws of the state of Illinois without regard to its conflict of law principles.

**15. DISPUTE RESOLUTION:** In the event of any dispute INCLUDING, BUT NOT LIMITED TO, BREACH OF CONTRACT, BREACH OF WARRANTY, CLAIMS BASED IN TORT, NEGLIGENCE, PRODUCT LIABILITY, FRAUD, MARKETING, STATE OR FEDERAL REGULATIONS, ANY CLAIMS REGARDING THE ENFORCEABILITY OF THIS LIMITED WARRANTY, AND THE WAIVER OF CLASS ACTION TRIALS between Buyer and Seller, either may choose to resolve the dispute by binding arbitration, as described below, instead of in court. THIS MEANS IF EITHER BUYER OR SELLER CHOOSE BINDING ARBITRATION, NEITHER PARTY SHALL HAVE THE RIGHT TO LITIGATE SUCH CLAIM IN COURT OR HAVE A JURY TRIAL. DISCOVERY AND APPEAL RIGHTS ARE LIMITED IN BINDING ARBITRATION. Buyer and Seller agree that the proper venue if Arbitration is not so chosen by Buyer or Seller of all actions arising in connection herewith shall be only in the state of Illinois and the parties agree to submit to such jurisdiction. No action, regardless of form, arising out of transactions relating to the agreement, may be brought by either party more than two (2) years after the cause of action has accrued. The U.N. Convention on Contracts for the International Sales of Goods shall not apply to this agreement.

**16. CLASS ACTION WAIVER:** BINDING ARBITRATION MUST BE ON AN INDIVIDUAL BASIS. THIS MEANS NEITHER BUYER NOR SELLER MAY JOIN OR CONSOLIDATE CLAIMS IN ARBITRATION BY OR AGAINST OTHERS, OR LITIGATE IN COURT OR ARBITRATE ANY CLAIMS AS A REPRESENTATIVE OR MEMBER OF A CLASS OR IN A PRIVATE ATTORNEY GENERAL CAPACITY. ADMINISTRATION OF ARBITRATION: The binding arbitration must be administered by the American Arbitration Association ("AAA") in accordance with its Commercial Arbitration Rules and/or Supplementary Procedures for Consumer-Related Disputes (including proceedings to mitigate costs of travel). This binding arbitration is governed by the Federal Arbitration Act ("FAA") (9 USC §1, et. seq.) and will govern the interpretation and enforcement. The binding arbitration shall be held at a location determined by AAA or at such other location as mutually agreed. In addition to the terms stated above, the following will apply to the binding arbitration: (1) the arbitrator, and not any federal, state, or local court or agency, will have exclusive authority to resolve any dispute relating to the interpretation, applicability, enforceability or formation of this Agreement including any claim that all or any part of this Agreement is void or voidable; (2) the arbitrator shall apply Illinois law consistent with the FAA.

HD Electric Company is committed to ongoing review and improvement of its product lines, and thus reserves the right to modify product design and specifications without notice.

HD Electric Company® products are available through HDE® sales representatives worldwide. HD Electric products receive final assembly and shipment from HDE's production facility at Suite 400 - 4320 Executive Drive, Southaven, MS 38672.

**HD Electric Company is ISO 9001:2015 certified**

Printed in U.S.A. © HD Electric Company 2020 • Bulletin No. VWATCH IM-700a