GERBER

www.gerberonline.com

ALLERTON™ 1.28 GPF Elongated ErgoHeight™ Toilet

12″ Rough-in

Features:

☐ HE-20-007

- Vitreous china
- Combination bowl and tank
- 3″ flush valve with Fluidmaster® pilot valve for quiet fill
- 12″ rough-in
- Elongated ErgoHeight™ bowl
- Dual-fed siphon jet action bowl (no splashing)
- 2″ fully glazed trapway for effective waste removal
- Side tank lever
- 6 point tank to bowl connection for tank stability
- Sanitary bead for easy cleaning
- Color matched bolt caps included
- Toilet seat not included

Technical Information:

Included Components:

☐ Combination	HE-20-007
☐ Bowl	HE-21-577
☐ Tank	HE-28-580

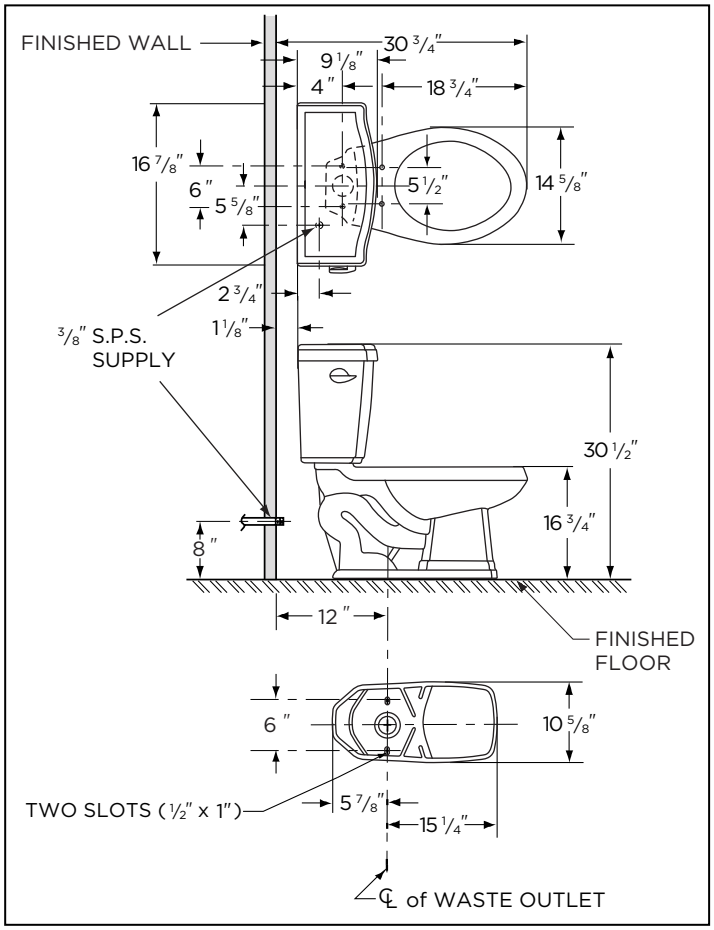

Fixtures:

Configuration	Two-piece, elongated ErgoHeight™
Water per Flush	1.28 gpf (4.8 lpf)
Rough-In	12″
Height	30 1/2″
Width	16 7/8″
Depth	29 5/8″
Trapway	2″
Large Water Surface	10 1/8″ x 7 3/4″
Shipping Weight	88 lbs

Optional Accessories: (to be purchased separately)

Soft Close Toilet Seat	99-213

Colors/Finishes:

- White
- Other: Refer to Price Book for additional colors/finishes

Warranty:

- Limited lifetime warranty

NOTES: All dimensions are in inches. Illustrations may not be drawn to scale.

IMPORTANT:
Dimensions of fixtures are nominal and may vary within the range of tolerances established by ASME standard A 112.19.2 THIS FIXTURE QUALIFIES ACCORDING TO ASME TEST PROCEDURES AS A HIGH EFFICIENCY WATER CLOSET WITH AN AVERAGE CONSUMPTION OF 1.28 gpf (4.8 Lpf) OR LESS.