INSTRUCTION MANUAL

GREENLEE®
UTILITY
A Textron Company

Serial Number

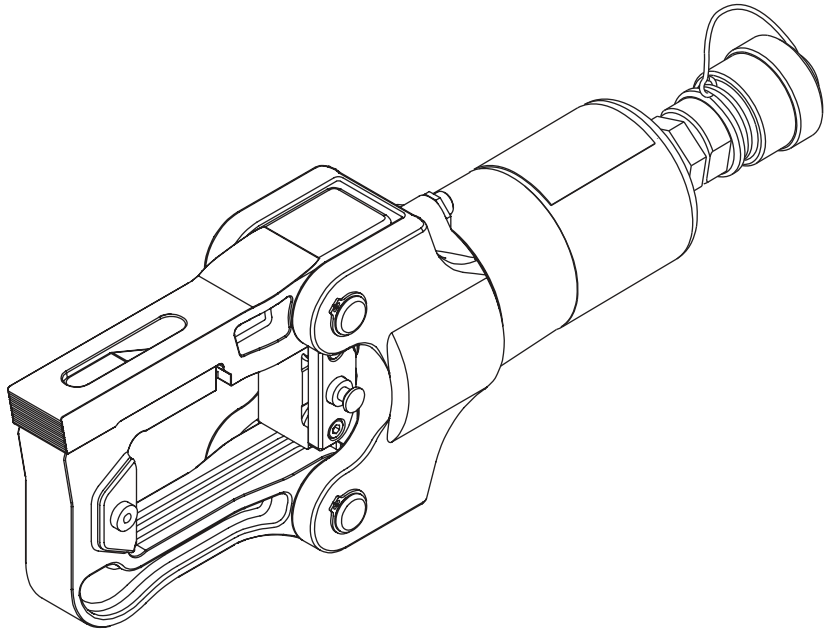

GATOR® RK12CX 12-ton Remote Tool

Read and **understand** all of the instructions and safety information in this manual before operating or servicing this tool.

Register this product at www.greenlee.com

52065532
© 2013 Greenlee Textron Inc.
7/13

Table of Contents

Description 2
Safety 2
Purpose of this Manual 2
Important Safety Information 3–4
Identification 5
Specifications 5
Operation 6–14
- Crimping Using KC12 or KA12 type U-style Dies 7
- Crimping Using UA12ID Dieless Die Set 8
- Cutting 9
- Punching 10–14

Die Selection 15
Connector Selection 15
Additional U-type Dies 16
Available Accessories 16
cUL and UL Classified Crimps 17
Connector Table 17
Maintenance 18
Illustration and Parts List 19

Description

The RK12CX 12-ton Remote Tool is a hand-held tool intended to crimp cable, cut cable and threaded rod, and punch holes with the proper adapters. The single-acting ram requires hydraulic pressure to advance, and uses an internal spring to return.

This crimping tool requires an external 10,000 psi (700 bar) hydraulic power source, such as Greenlee 975, 976-22, 980, 980-22, and EHP700L. The RK12CX may also be powered using a hydraulic intensifier capable of developing 10,000 psi (700 bar), such as the Greenlee Utility Dynapress® intensifier.

Safety

Safety is essential in the use and maintenance of Greenlee tools and equipment. This manual and any markings on the tool provide information for avoiding hazards and unsafe practices related to the use of this tool. Observe all of the safety information provided.

Purpose of this Manual

This manual is intended to familiarize all personnel with the safe operation and maintenance procedures for the following Greenlee Utility tool:

RK12CX 12-ton Remote Tool

Keep this manual available to all personnel.

Replacement manuals are available upon request at no charge at www.greenlee.com.

Do not discard this product or throw away!
For recycling information, go to www.greenlee.com.

All specifications are nominal and may change as design improvements occur. Greenlee Textron Inc. shall not be liable for damages resulting from misapplication or misuse of its products.

GATOR and Kwik Stepper are registered trademarks of Greenlee Textron Inc.

Blackburn is a registered trademark of Thomas & Betts.

KEEP THIS MANUAL

IMPORTANT SAFETY INFORMATION

SAFETY ALERT SYMBOL

This symbol is used to call your attention to hazards or unsafe practices which could result in an injury or property damage. The signal word, defined below, indicates the severity of the hazard. The message after the signal word provides information for preventing or avoiding the hazard.

⚠DANGER

Immediate hazards which, if not avoided, WILL result in severe injury or death.

⚠WARNING

Hazards which, if not avoided, COULD result in severe injury or death.

⚠CAUTION

Hazards or unsafe practices which, if not avoided, MAY result in injury or property damage.



⚠DANGER

Read and understand all of the instructions and safety information in this manual before operating or servicing this tool.

Failure to observe this warning will result in severe injury or death.

⚠DANGER

Do not use this crimping tool with any hydraulic hoses or other hydraulic components rated at less than 10,000 psi (700 bar).

Failure to observe this warning will result in severe injury or death.



⚠WARNING

Electric shock hazard:

This tool is not insulated. When using this unit on or near energized electrical lines, use proper personal protective equipment.

Failure to observe this warning could result in severe injury or death.

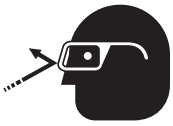

⚠WARNING

Wear eye protection when operating or servicing this tool.

Failure to wear eye protection could result in serious eye injury from flying debris or hydraulic oil.



⚠WARNING

Skin injection hazard:

Do not use hands to check for oil leaks. Oil under pressure easily punctures skin. If injured, seek medical attention immediately to remove oil.

Failure to observe this warning could result in serious injury, gangrene, or death.



⚠WARNING

Do not use solvents or flammable liquids to clean the tool body. Solvents or flammable liquids could ignite and cause serious injury or property damage.

IMPORTANT SAFETY INFORMATION

⚠WARNING

An incomplete crimp can cause a fire.

Use proper die, connector, and cable combinations. Improper combinations can result in an incomplete crimp.

Failure to observe this warning could result in severe injury or death.



⚠WARNING

Pinch points:

Keep hands away from the crimping tool head when crimping.

Failure to observe this warning could result in severe injury or death.

⚠WARNING

Inspect tool and dies before use. Replace any worn or damaged parts. A damaged or improperly assembled tool can break and strike nearby personnel.

Failure to observe this warning could result in severe injury or death.

⚠CAUTION

Do not perform any service or maintenance other than as described in this manual. Injury or damage to the tool may result.

Failure to observe this precaution may result in injury and property damage.

IMPORTANT

Follow the operating instructions and safety information supplied with the hydraulic power source.

Note: Keep all decals clean and legible, and replace when necessary.

Identification

1. Head
2. Latch (for opening head)
3. Adapter Release Buttons
4. 3/8" Male Screw-type Coupler

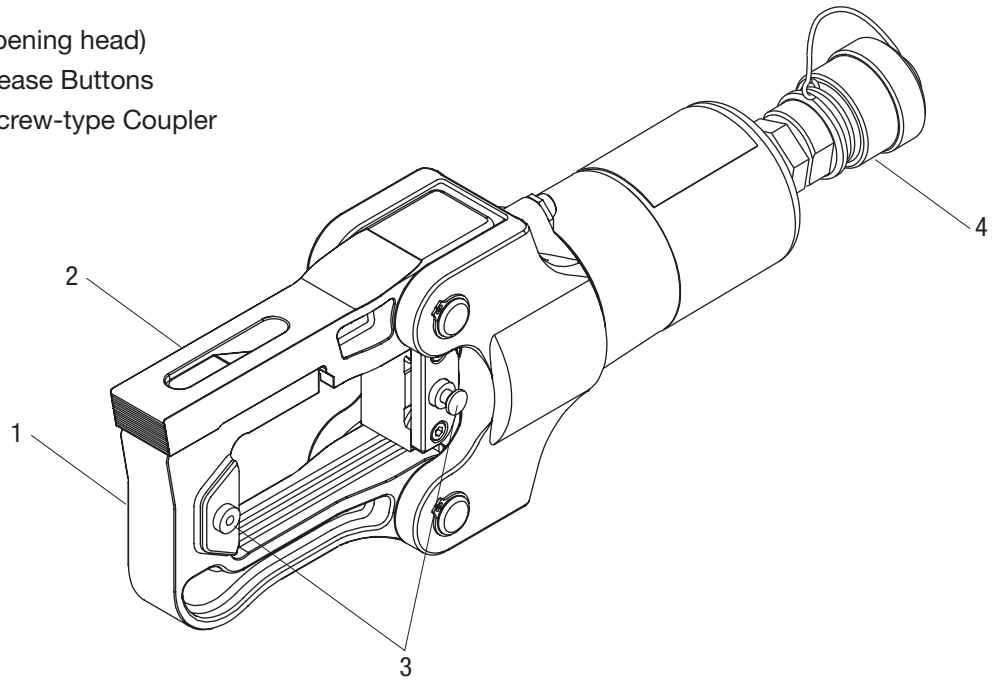

Specifications

Tool

Length ..... 13.0" (330.2 mm)
Width ..... 4.5" (114.3 mm)
Height (with battery) ..... 2.7" (68.6 mm)
Weight ..... 9.75 lb (4.4 kg)
Crimping Force ..... 12 tons (106 kN)

Crimping Capacities

Copper Color-Coded Lugs and Splices ..... 750 kcmil
Aluminum Color-Coded Lugs and Splices ..... 750 kcmil
UA12ID Dieless Die Crimping Range
Copper Color-Coded Lugs and Splices ..... 4 AWG–750 kcmil
Aluminum Color-Coded Lugs and Splices ..... 6 AWG–600 kcmil
5/8" Service Entrance Connectors ..... 10–1/0 AWG
.840 Service Entrance Connectors ..... 1/0–4/0 AWG
Aluminum Overhead "H" Taps ..... 6 AWG–500 kcmil
One-Piece ACSR Tension Splices ..... 4 AWG–556.5 kcmil
Two-Piece ACSR Tension Splices ..... 2 AWG–556.5 kcmil

Cutting Capacities

Copper and Aluminum Cable ..... 1-1/2" (40 mm)
ACSR ..... 954 kcmil (Cardinal)
Standard Guy Strand ..... 5/8"
EHS Guy Strand ..... 1/2"
Ground Rod ..... 1/2" (13 mm)
Rebar (schedule 60) ..... 1/2" (13 mm)
Threaded Rod ..... 1/4", 3/8", 1/2"

Punching Capacities

Round ..... 5-5/8" (144.1 mm) in 10 ga. mild steel
Rectangular ..... 2.677" x 5.433" (68.0 mm x 138.0 mm)
Square ..... 5.433" x 5.433" (138.0 mm x 138.0 mm)
Accessories required to punch ø 4" through ø 5-5/8": 12185 spacer, 04686 bushing, and 03170 sleeve

Operation

⚠WARNING

Inspect tool and dies before use. Replace any worn or damaged parts. A damaged or improperly assembled tool can break and strike nearby personnel.

Failure to observe this warning could result in severe injury or death.



⚠WARNING

Electric shock hazard:

This tool is not insulated. When using this unit on or near energized electrical lines, use proper personal protective equipment.

Failure to observe this warning could result in severe injury or death.



⚠WARNING

Wear eye protection when operating or servicing this tool.

Failure to wear eye protection could result in serious eye injury from flying debris or hydraulic oil.



⚠WARNING

Pinch points:

Keep hands away from the crimping tool head when crimping.

Failure to observe this warning could result in severe injury or death.

⚠WARNING

Use proper die, connector, and wire combinations.

Mismatched components can result in an incomplete crimp. Failure to complete a crimp could result in severe injury, death, or fire if a connection separates or if it has high electrical resistance.

IMPORTANT

Follow the operating instructions and safety information supplied with the hydraulic power source.

Operation—Crimping Using KC12 or KA12 type U-style Dies

Setup

1. Open the tool head.
2. Remove any accessories from the tool head.
3. Select the appropriate set of die adapters and dies.
4. Install the UA12T adapters and U-style dies—one set in each groove. Lock the die adapters in place with the detents.

   Important: Die adapters must be locked into place or the die detents will be damaged.
5. Visually check the dies to ensure that they are aligned correctly so that they will complete the crimping operation.
6. Close the tool head.

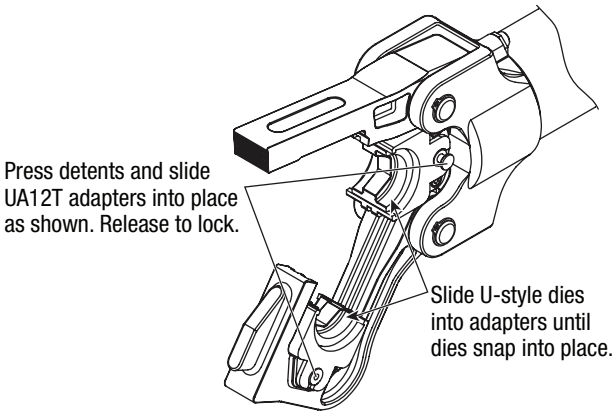

Preparing the Cable

Follow the lug manufacturer's instructions for appropriate cable strip length.

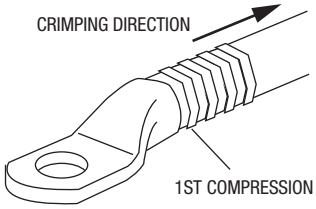

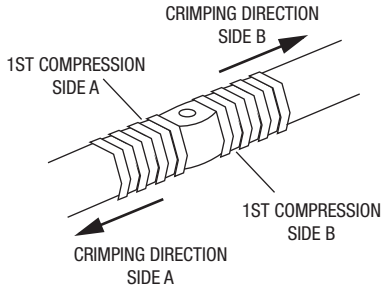

Crimping Procedure

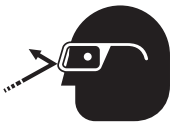

⚠WARNING

Wear eye protection when operating or servicing this tool.

Failure to wear eye protection could result in serious eye injury from flying debris or hydraulic oil.

⚠WARNING

An incomplete crimp can cause a fire.

Use proper die, connector, and cable combinations. Improper combinations can result in an incomplete crimp.

Failure to observe these warnings could result in severe injury or death.

1. Press the latch and open the tool head.
2. Insert the properly assembled connector into the tool head.
3. Close the tool head.
4. Activate the hydraulic power source until the ram has advanced and the crimp is completed.

   Note: To ensure a complete crimp, verify that the power source has reached 10,000 psi (700 bar). Refer to the "Periodic Relief Valve Check" in this manual.
5. Stop the power source and allow the ram to retract.
6. Position the crimper for the next crimp. Repeat Steps 4 and 5 for the number of crimps as described in this manual.
7. Open the crimping head and remove the connector.

Note: After completing the last crimp on an aluminum connector, wipe off the excess oxide inhibitor.

Operation—Crimping Using UA12ID Dieless Die Set

Setup

1. Open the tool head.
2. Remove any accessories from the tool head.
3. Install the UA12ID indenter against the ram and lock in place with the detent.
4. Install the UA12ID anvil into the head and lock in place with the detent.

   Important: The indenter and anvil must be locked into place or the detents will be damaged.
5. Visually check the indenter and anvil to ensure that they are aligned correctly so that they will complete the crimping operation.
6. Close the tool head.

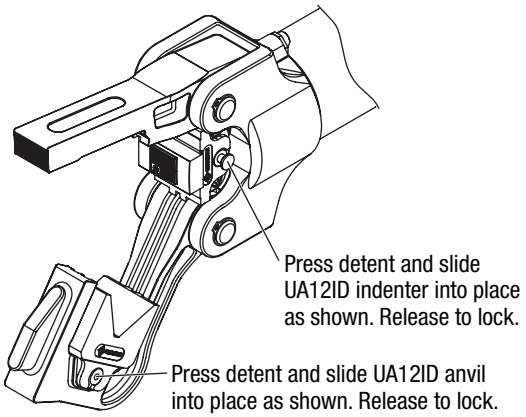

Preparation

IMPORTANT

For a cUL or UL classified crimp, refer to "Connector Table" in this instruction manual.

1. Select a proper size and type of connector to correspond with the wire or cable.
2. Strip the cable to an appropriate length. Follow the connector manufacturer's instructions.

   Note: Apply an oxide inhibitor, if required. Refer to the connector manufacturer's instructions.
3. Clean the die seat area.

Crimping Procedure

1. Insert the cable fully into the connector.
2. Place the connector into the V of the crimping head as shown below.

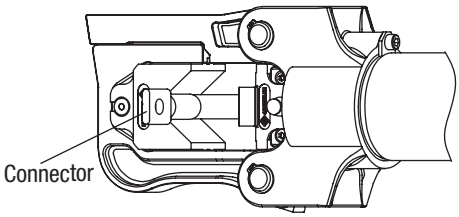

3. If open, close the crimping head. Make sure the head and latch are fully engaged.
4. For a cUL or UL classified crimp, complete the number of crimps specified under "Connector Table" in this manual.
5. For a single crimp, position the connector so the crimp will be located at the center of the barrel. For a double crimp, position the connector so two crimps will be evenly spaced between the connector marks.
6. Activate the hydraulic power source until the ram has advanced and the crimp is completed.

   Note: To ensure a complete crimp, verify that the power source has reached 10,000 psi (700 bar). Refer to the "Periodic Relief Valve Check" in this manual.
7. Stop the power source and allow the ram to retract.
8. Lift the latch to open the crimping head and remove the connector.

Note: After completing the last crimp on an aluminum connector, wipe off the excess oxide inhibitor.

⚠WARNING

An incomplete crimp can cause a fire.

Use proper die, connector, and cable combinations. Improper combinations can result in an incomplete crimp.

Failure to observe these warnings could result in severe injury or death.

Operation—Cutting



⚠WARNING

Electric shock hazard:

This tool is not insulated. When using this unit on or near energized electrical lines, use proper personal protective equipment.

Failure to observe this warning could result in severe injury or death.

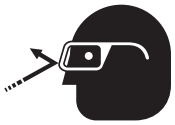

⚠WARNING

Wear eye protection when operating or servicing this tool.

Failure to wear eye protection could result in serious eye injury from flying debris or hydraulic oil.

Setup

1. Open the tool head.
2. Remove any accessories from the tool head.
3. Select the appropriate set of blades, using the table provided on this page.
4. Install one blade in each groove. Slide the tab into the slots in the ram and head. Lock them in place with the W-type detents.
5. Visually check the blades to ensure that they are aligned correctly so that they will complete the butting operation.
6. Close the tool head.

Accessory Table

Task	Blade
Copper and aluminum 26 mm (1.00") max.	UC26
Copper and aluminum 40 mm (1.56") max.	UC40
ACSR Copperweld ACAR Guy strand EHS guy strand Ground rod Anchor rod Soft bolts Rebar	UCACSR
Threaded rod	Threaded rod

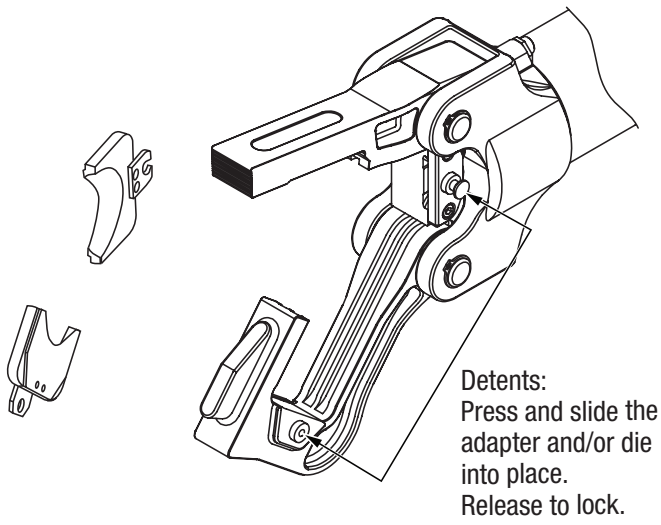

Cutting Procedure

1. Press the latch and open the tool head.
2. Position the item to be cut in the tool head.
3. Close the tool head.
4. Activate the hydraulic power source until the ram has advanced and the cut is completed.
5. Stop the power source and allow the ram to retract.

Operation—Punching



⚠WARNING

Electric shock hazard:

Do not use this tool as a punch driver on or near live circuits. This includes, but is not limited to, the following circumstances:

- Energized electrical lines
- Energized circuit breaker panels and fuse boxes
- Junction boxes with energized circuits

Failure to observe this warning could result in severe injury or death.



⚠WARNING

Wear eye protection when operating or servicing this tool.

Failure to wear eye protection could result in serious eye injury from flying debris or hydraulic oil.

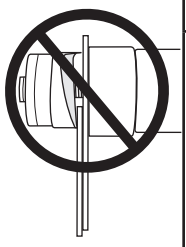

⚠WARNING

Do not attempt to punch a hole through two or more thicknesses of material. This will bend or break the draw stud, and could throw parts with great force.

Failure to observe this warning could result in severe injury or death.

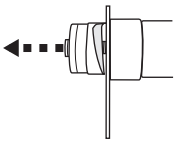

⚠WARNING

A component failure could throw broken parts.

- Do not allow anyone to stand in front of the punch.
- Close access doors or covers on any equipment that is in line with the punch.

Failure to observe this warning could result in severe injury or death.

⚠WARNING

Set up the tool properly. An improper setup could cause a component to fail and strike nearby personnel with great force.

- Thread the punch completely onto the draw stud. All of the punch threads must be engaged by the draw stud threads. Incomplete assembly could cause a component failure.
- Use only Greenlee punches, dies, and draw studs. Other manufacturers' components might not withstand the forces generated by this punch driver.

Failure to observe these warnings could result in severe injury or death.

Operation—Punching (cont'd)

Setup and Punching Procedure

1. Open the tool head.
2. Remove any accessories from the tool head.
3. Install the punch driver so that the drive piston is toward the yoke, as shown.

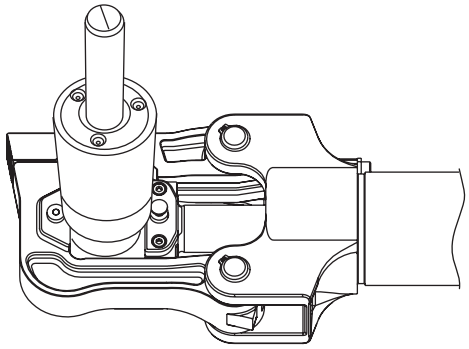

4. Close the tool head.
5. Select the punch, die, and draw stud to make the appropriate size hole. Refer to the illustrations on the following pages.
6. Determine and mark the exact location for the hole. Use a Greenlee Kwik Stepper® drill bit to drill a hole that is slightly larger than the draw stud. This is the pilot hole.
7. Thread the 3/4" draw stud or 3/4" adapter completely into the punch driver. Refer to the illustrations on the following pages.

   Notes: For a punch and die with a 3/8" center hole, thread the 3/8" draw stud into the end of the 3/4" adapter.

   For 4" and larger punch and die, add the bushing to the die, slide the spacer over the 3/4" draw stud, and install the 1-1/8" sleeve.
8. Install a spacer, if necessary. Refer to the illustrations on the following pages.
9. Slide the die over the draw stud with the open end of the die facing away from the punch driver.
10. Insert the draw stud through the pilot hole.
11. Thread the punch onto the draw stud with the cutting surfaces of the punch facing the material. Tighten the punch by hand until the spacer, die, material, and punch contact each other.

    Note: All of the punch threads must be engaged by the draw stud threads. If any of the punch threads are not engaged, disassemble the setup, remove the spacer, and reassemble the setup.
12. Activate the hydraulic power source to advance the ram.
13. Stop the power source when the punch completes the hole, and allow the ram to retract.
14. Unscrew the punch. Remove slugs from the die. Remove the spacer and unscrew the draw stud.

Operation—Punching (cont'd)

Round Punches
Metric: 22.5 mm (max.)
Conduit Size: 1/2" (max.)
Actual Size: 0.885" (max.)

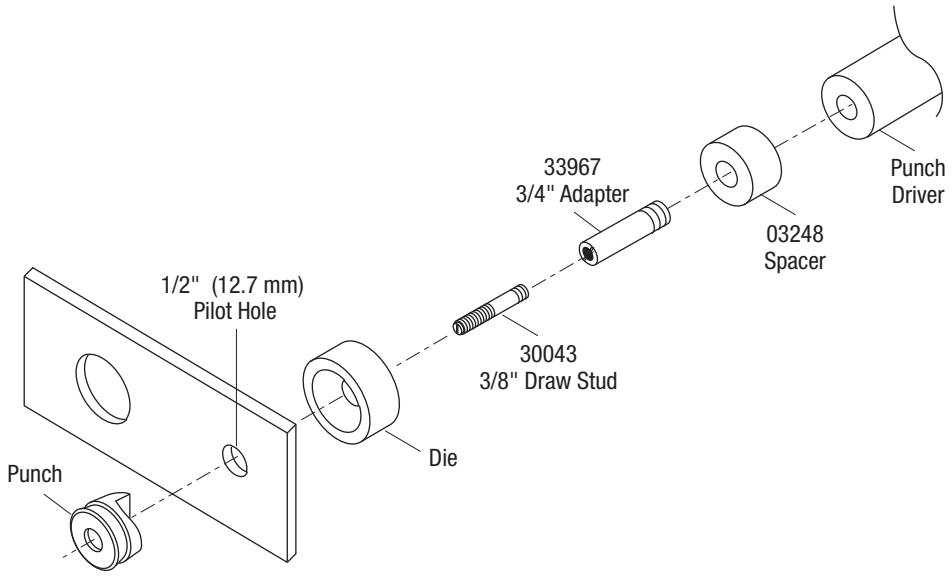

Round Punches
Metric: 28.3 mm to 95.2 mm
Conduit Size: 3/4" to 3"
Actual Size: 1.115" to 3.75"

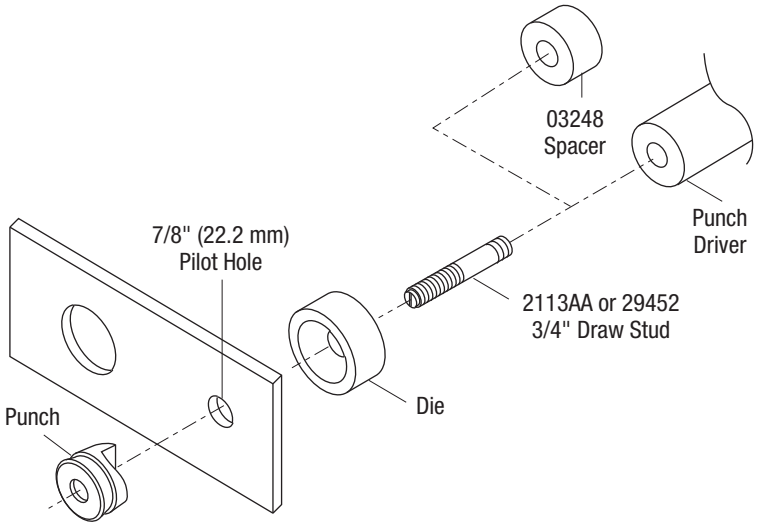

Round Punches
Metric: 95.2 mm to 143 mm
Conduit Size: 3-1/2" to 5"
Actual Size: 4" to 5-5/8"

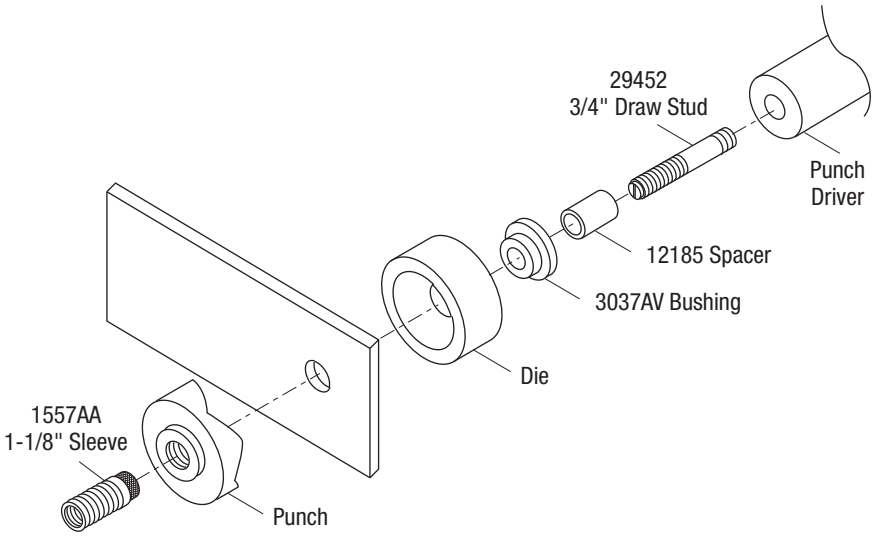

Operation—Punching (cont'd)

Square and Rectangular Punches

Metric: 12.7 mm square

Inches: 1/2" square

Metric: 11.1 mm x 22.2 mm rectangular

Inches: 7/16" x 7/8" rectangular

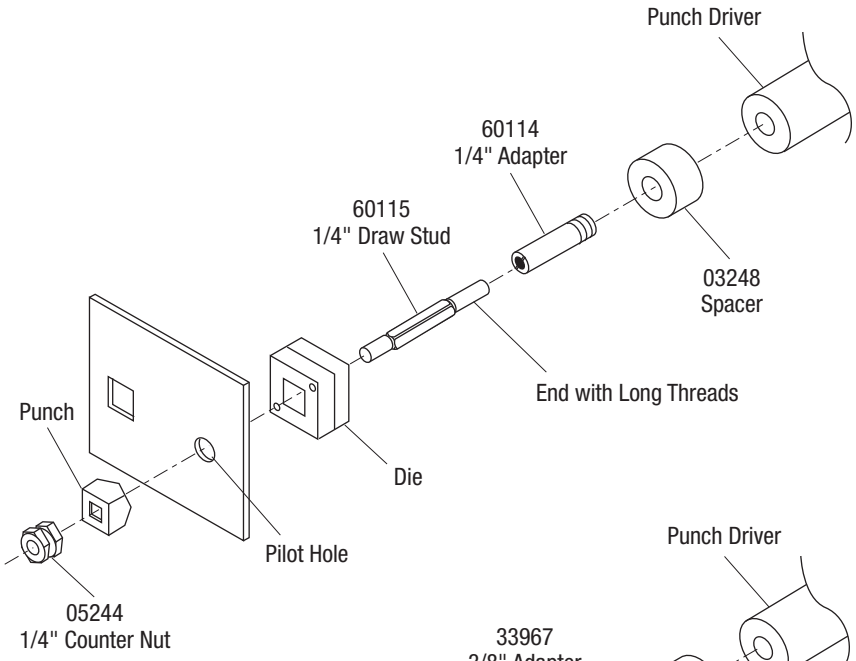

Square and Rectangular Punches

Metric: 15.9 mm to 24.0 mm square

Inches: 5/8" to 0.945" square

Metric: 17.0 mm x 19.0 mm rectangular

Inches: 0.670" x 0.749" rectangular

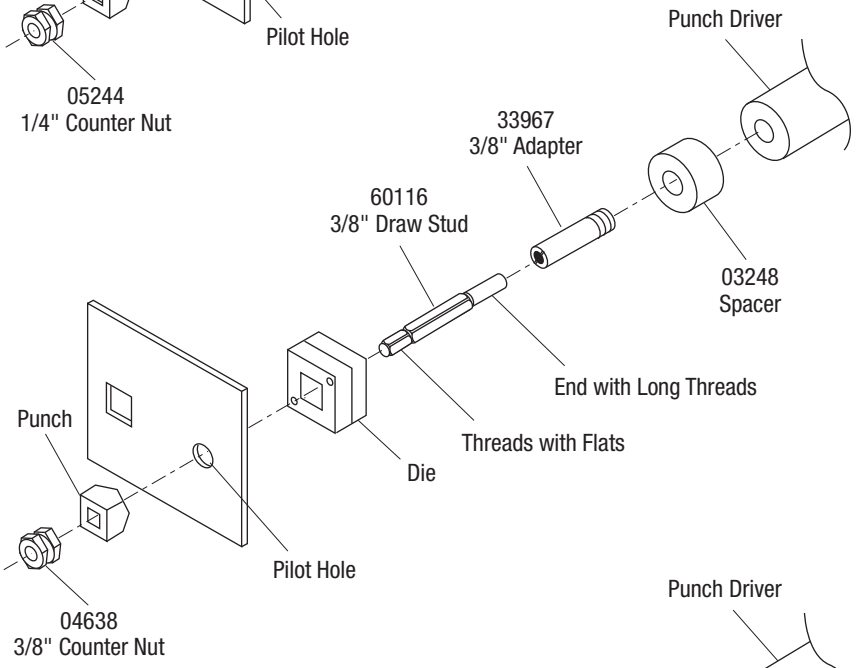

Square and Rectangular Punches

Metric: 25.4 mm square

Inches: 1" square

Metric: 19.1 mm x 29.0 mm to
31.8 mm x 35.1 mm rectangular

Inches: 0.750" x 1.140" to
1.250" x 1.380" rectangular

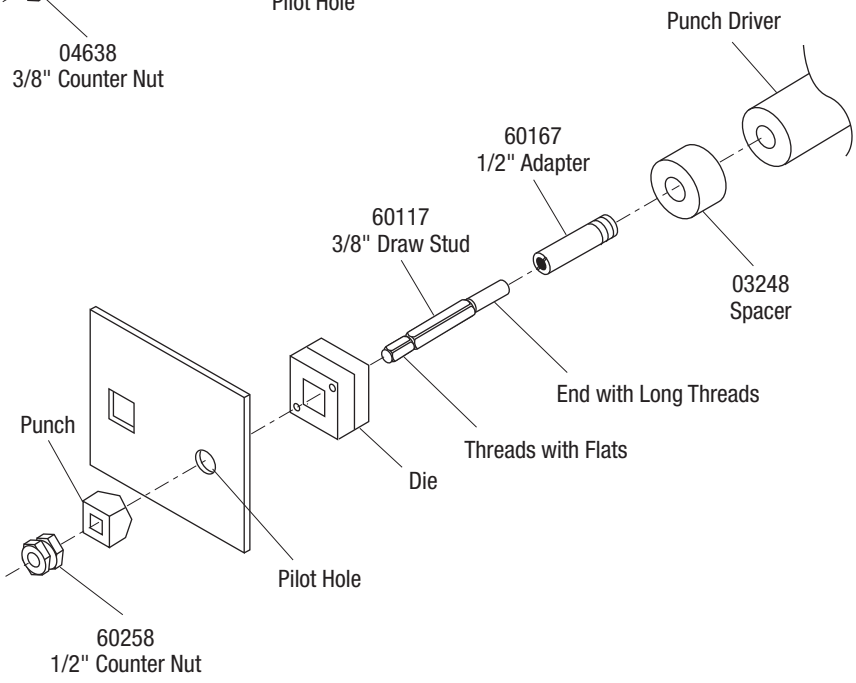

Operation—Punching (cont'd)

Square and Rectangular Punches

Metric: 46.0 mm to 68.0 square

Inches: 1.811" to 2.677" square

Metric: 33.3 mm x 66.7 mm to 35.0 mm x 65.0 mm rectangular

Inches: 1.312" x 2.625" to 1.378" x 2.559" rectangular

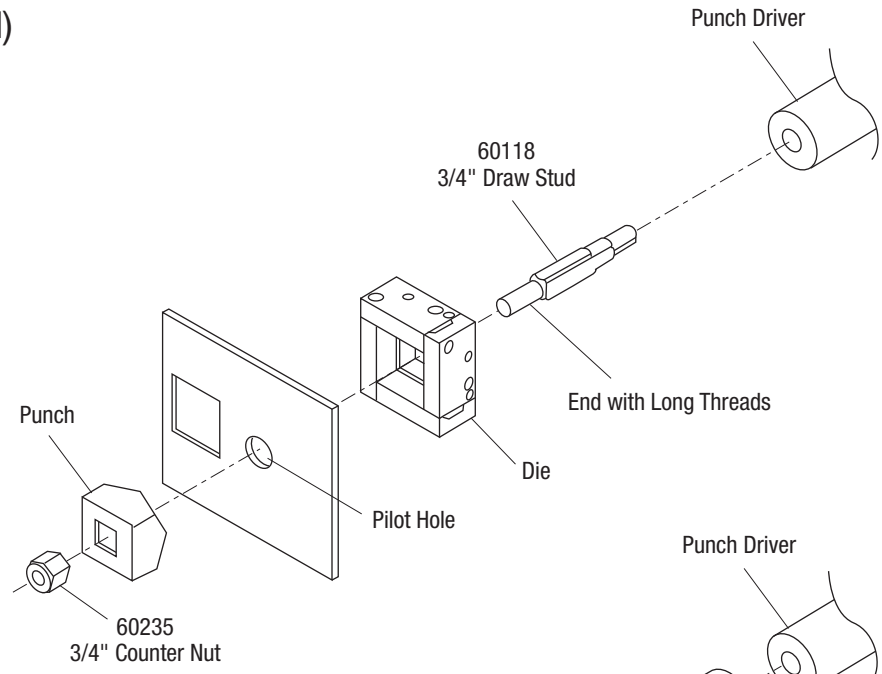

"D", Double "D", and Key Punches

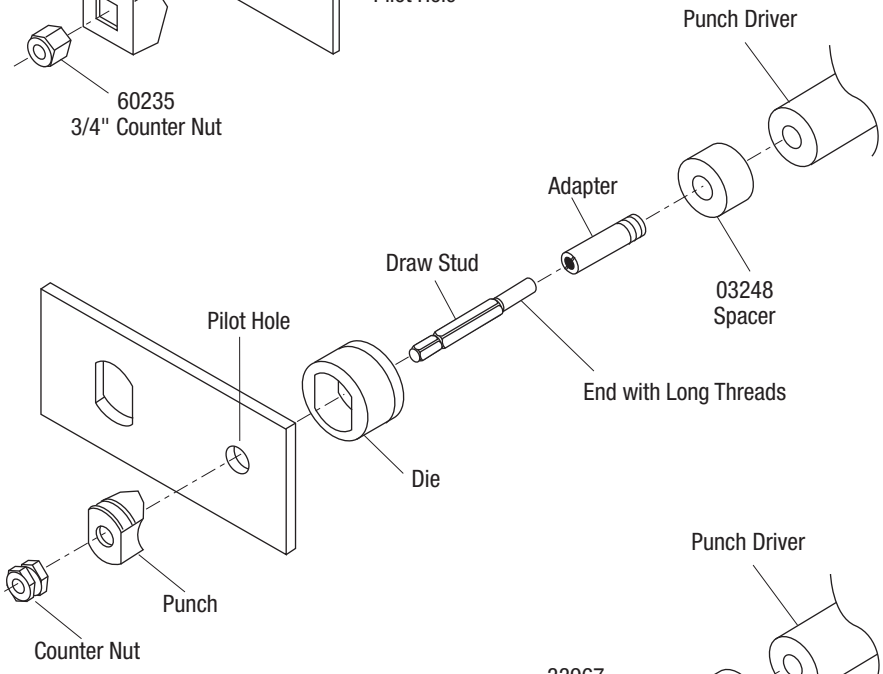

Electronic Connector Panel Punches

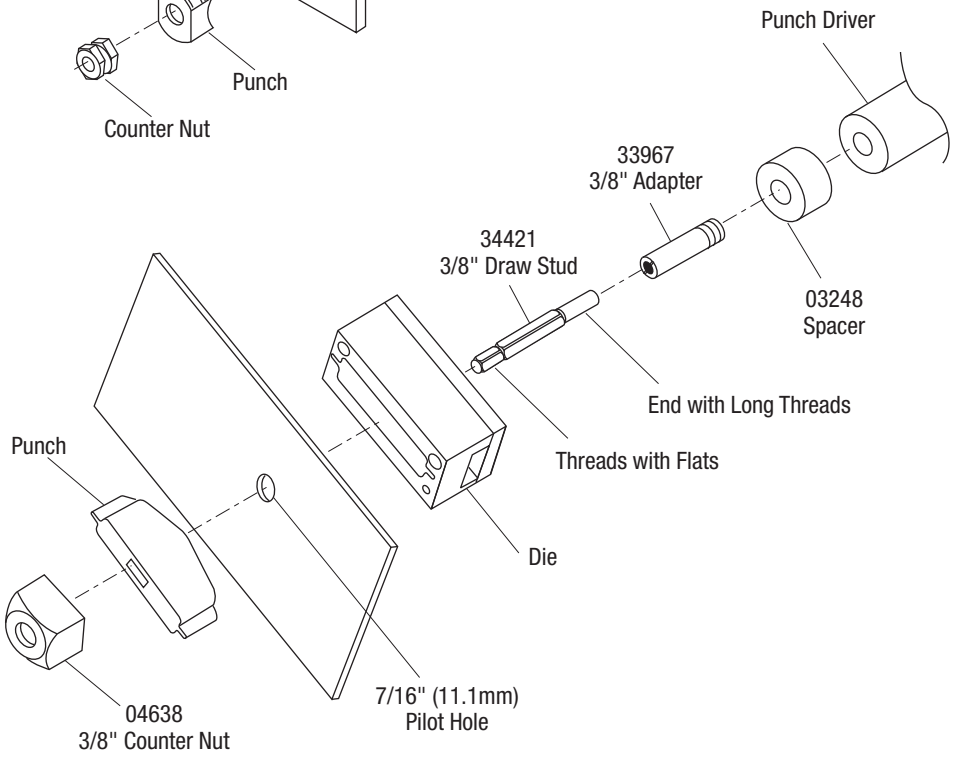

Die Selection

Refer to “Connector Selection” for brand names and model numbers of appropriate lugs as well as crimping instructions.

Crimps made with this tool and KC12-type or KA12-type dies are cUL and UL classified when used with the appropriate conductor and connectors listed below.

Dies for Copper Connectors

Catalog No.	UPC No.	Cable Size	Color Code	No. of Crimps
KC12-8	10996	8 AWG	Red	1
KC12-6	10997	6 AWG	Blue	1
KC12-4	10998	4 AWG	Gray	1
KC12-2	10999	2 AWG	Brown	1
KC12-1	11003	1 AWG	Green	1
KC12-1/0	11004	1/0 AWG	Pink	1
KC12-2/0	11007	2/0 AWG	Black	1
KC12-3/0	11010	3/0 AWG	Orange	1
KC12-4/0	11011	4/0 AWG	Purple	1
KC12-250	11012	250 kcmil	Yellow	1
KC12-300	11013	300 kcmil	White	2
KC12-350	11014	350 kcmil	Red	2
KC12-400	11015	400 kcmil	Blue	2
KC12-500	11016	500 kcmil	Brown	2
KC12-600	11018	600 kcmil	Green	2
KC12-750	11020	750 kcmil	Black	2

Dies for Aluminum Connectors

Catalog No.	UPC No.	Cable Size	Color Code	No. of Crimps
KA12-8	22084	8 AWG	Blue	1
KA12-6	22085	6 AWG	Gray	1
KA12-4	22086	4 AWG	Green	1
KA12-2	22087	2 AWG	Pink	1
KA12-1	22088	1 AWG	Gold	1
KA12-1/0	22089	1/0 AWG	Tan	1
KA12-2/0	22090	2/0 AWG	Olive	2
KA12-3/0	22121	3/0 AWG	Ruby	2
KA12-4/0	22122	4/0 AWG	White	2
KA12-250	22123	250 kcmil	Red	2
KA12-300	22124	300 kcmil	Blue	2
KA12-350	22125	350 kcmil	Brown	2
KA12-400	22126	400 kcmil	Green	3
KA12-500	22127	500 kcmil	Pink	3
KA12-600	22128	600 kcmil	Black	3
KA12-750	22129	750 kcmil	Yellow	3

Connector Selection (NOT for use with flex, navy or welding wire)

Tool Range: 8 AWG to 750 kcmil

When used with KC12-type dies, this tool is cUL and UL classified for use with the following connector brands:

CONNECTOR TYPE	BARREL TYPE	ANDERSON	BLACKBURN®	BURNDY	ILSCO	PANDUIT	T&B	PENN-UNION	NUMBER OF CRIMPS*
Copper Splices	Short	VHSS	CSP	YS-L	CT	SCSS SCS	54504 to 54523-TB	BCU	8 AWG to 250 kcmil: 1 crimp 300 to 750 kcmil: 2 crimps
	Long	VHS	CU	YS	CTL	SCL SCH	54804 to 54823	BBCU	
Copper Lugs	Short	VHCS	CTL-2/CTL	YA-2LN/ YA-L/YA-2L; YA/YA-L-TC/ YA-L-2TC	CSW CRA/CRB CRC	LCAS LCA LCD LCAN	54104 to 54123-TB; 54204 to 54223	BLU	
	Long	VHCL	CTL-L/LCN	YA/YAZ YA-2N/YA-2TC YAZ-2N/YAZ-2TC	CLN, CLW CRA-L/CRB-L CRA-2/CRB-2L CRC-2L	LCB LCC	54930BE to 54923BE; 54850BE to 54880BE	BBLU	

When used with KA12-type dies, this tool is cUL and UL classified for use with the following connector brands:

CONNECTOR TYPE	ANDERSON	BLACKBURN®	BURNDY	ILSCO	PANDUIT	T&B	PENN-UNION	NUMBER OF CRIMPS*
Dual-rated Aluminum Splices	VACS	ASP	YS-A	AS	SA	60501 to 60578	PIK	8 to 1/0 AWG: 1 crimp 2/0 AWG to 350 kcmil: 2 crimps 400 to 750 kcmil: 3 crimps
Dual-rated Aluminum Lugs	VACL	ATL	YA-A YA-ATN	ACL/ACN 2ACL/2ACN	LAA LAB	60101 to 60176; 60230 to 60278	BLUA	

CLASSIFIED cULus 95R7

* Use the number of crimps listed in this column instead of the number provided with the connector.

Additional U-type Dies

Greenlee Catalog No.	Greenlee UPC No.	FCI Burndy No.
KD12-10	10188	U-BG
KD12-11	10189	U-0
KD12-12	10190	U-C
KD12-14	10192	U-161
KD12-15	10193	U-162
KD12-16	10194	U-163
KD12-17	10195	U-165
KD12-18	10196	U-166
KD12-19	10197	U-243
KD12-20	10198	U-247
KD12-21	10199	U-249
KD12-30	10200	U-D3
KD12-31	10201	U-E
KD12-32	10202	U-F
KD12-33	10203	U-997
KD12-35	10205	U-238
KD12-36	10206	U-654
KD12-37	10207	U-655
KD12-38	10208	U-658
KD12-39	10209	U-659
KD12-40	10210	U-998

Available Accessories

Adapter	Greenlee Part No.	Description
UC26	50067141	Cutter blades for copper and aluminum 26 mm (1") max.
UC40	50070363	Cutter blades for copper and aluminum 40 mm (1-1/2") max.
UCACSR	50070371	Cutter blades for ACSR, ACAR, standard guy wire, EHS guy wire, copperweld, ground rod, anchor rod, soft bolts, rebar
UCUNC14	50070380	Cutter blades for 1/4" threaded rod
UCUNC38	50070398	Cutter blades for 3/8" threaded rod
UCUNC12	50072749	Cutter blades for 1/2" threaded rod
UA12P	50118900	Punch driver adapter
04686	50046861	Die bushing*
12185	50121855	Spacer*
03170	50031708	Punch sleeve, 1-1/8"*
UA12T	52020102	Adapter for U-type dies
UA12ID	52061814	Dieless die set

*Required for knockout punches larger than 4" actual diameter.

cUL and UL Classified Crimps

Crimps made with the Greenlee UA12ID dieless die and RK12CX crimping tool are cUL and UL classified on standard concentric, compressed, or compact stranded copper and aluminum cable with the connectors listed here.

Refer to the "Connector Table" for the brand names and model numbers of appropriate connectors and the number of crimps required.

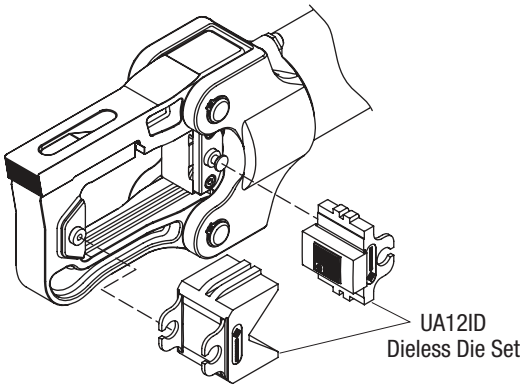

Connector Table (NOT for use with flex, navy or welding wire)

Range: Copper Connectors—4 AWG to 750 kcmil
Aluminum Connectors—6 AWG to 600 kcmil

COPPER CONNECTOR TYPE		ANDERSON	BLACKBURN®	BURNDY	ILSCO	PANDUIT	T & B	PENN-UNION	TYCO (AMP)
Copper Splices		VHSS VHS	CSP CU	YS-L YS	CT CTL	SCSS SCS SCL, SCH	54506 to 54528 54806 to 54828	BCU BBCU	—
Copper Lugs		VHCS VHCL	CTL CTL-L LCN	YA, YA-L, YA-2L YA-2LN, YA-2N YA-L-TC, YA-L-2TC YA-2TC, YAZ YAZ-2N, YAZ-2TC	CLN, CLW, CSW CRA, CRB, CRC CRA-L, CRB-L CRA-2L CRB-2L CRC-2L	LCAS LCA LCB LCD, LCC LCAN	54106 to 54128 54206 to 54228 54906BE to 54928BE 54854BE to 54882BE	BLU BBLU	1099898-2 to 1-1099898-5 1099899-2 to 1-1099899-9 1099939-1 to 1-1099939-5
*Number of Crimps	Copper Cable Size: 4 AWG–750 kcmil	1	1	1	1	1	1	1	1

ALUMINUM CONNECTOR TYPE		ANDERSON	BLACKBURN®	BURNDY	ILSCO	PANDUIT	T & B	PENN-UNION
Dual-Rated Aluminum Splices		VACS	ASP	YS-A	AS	SA	60507 to 60584	PIK BCUA
Dual-Rated Aluminum Lugs		VACL	ATL	YA-A YA-A-TN	ACL, ACN 2ACL, 2ACN	LAA LAB	60106 to 60184 60230 to 60284	BLUA
*Number of Crimps	Cable Size: 6 AWG–500 kcmil	1	1	1	1	1	1	1
	Cable Size: 600 kcmil	2	1	1	1	2	1	1

* When crimping with the UA12ID dieless die set, use the number of crimps listed in this table instead of the number provided with the connector.

Maintenance

- Keep the tool clean. Use the tool with care to keep dirt and grit out of the hydraulic system. Contamination is the most common cause of failure for hydraulic tools.
- Store the tool in its original case with the ram fully retracted.
- Inspect the hydraulic hoses periodically.
- Periodically verify that the power source reaches 10,000 psi (700 bar). Refer to the “Periodic Relief Valve Check” in this manual.

Periodic Relief Valve Check

⚠WARNING



Skin injection hazard:

- Do not use fingers or hands to check for leaks.
- Depressurize hydraulic system before servicing.

High pressure oil easily punctures skin causing serious injury, gangrene or death. If injured seek medical help immediately to remove oil.

⚠WARNING

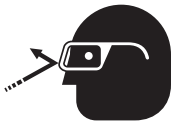

Wear eye protection when using this tool.

Failure to wear eye protection could result in serious eye injury from flying debris or hydraulic oil.

⚠WARNING



Pinch points:

Keep hands away from closing dies.

Failure to observe this warning could result in severe injury or death.

⚠WARNING

Inspect tool and dies before use. Replace any worn or damaged parts. A damaged or improperly assembled tool could break and strike nearby personnel with sufficient force to cause severe injury or death.

⚠CAUTION

- Do not operate crimping tool without dies in place. Damage to the ram or crimping tool head may result.
- Do not perform any service or maintenance other than as described in this manual. Injury or damage to the tool may result.

Periodically verify that your hydraulic power source is supplying between 9600 and 10,400 psi (662 and 717 bar).

Use a test-quality pressure gauge on the supply line from the hydraulic power source.

1. Refer to the instructions supplied with the pressure gauge.
2. Stop the flow of hydraulic oil from the power source.
3. Connect the pressure gauge to the supply line of the power source.
4. Install the set of test dies into the crimping tool.
5. Activate the power source until the ram has advanced and the power source reaches relief pressure. The pressure gauge should read between 9600 psi and 10,400 psi (662 bar and 717 bar) .
6. Release the pressure by stopping flow from your power source. The ram will retract.

If crimp pressures are low, the hydraulic power source relief valve may need adjustment.

IMPORTANT

Relief valve adjustments must be performed according to the instructions provided with the hydraulic power source.

Illustration and Parts List

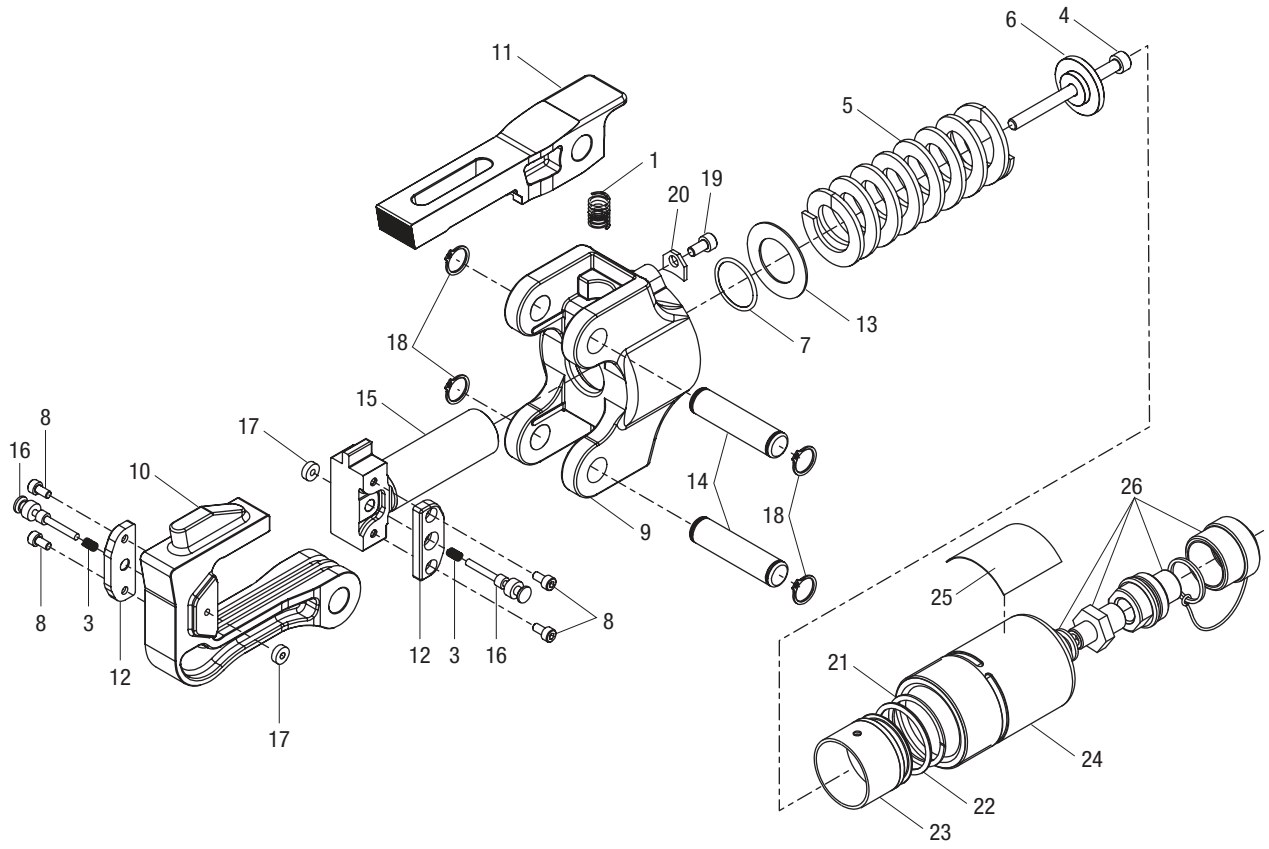

Key	Part No.	Description	Qty
	52045319	**Head and ram unit** (includes 1–3, 8–12, 14–18)	
1		Compression spring	1
3		Compression spring	2
4		Screw, M6-1.0 x 75 mm skt head cap	1
5	52066861	Compression spring	1
6	50066900	End cap	1
7		O-ring (included in 52054906)	1
8		Screw, M4-0.7 x 8 mm skt head cap	4
9		Fixed head	1
10		Movable head	1
11		Latch	1
12	52062835	Plate	2
13		Adapter disk	1

Key	Part No.	Description	Qty
14		Pin, pivot	2
15	52062834	Ram	1
16		Pin, adapter lock	2
17		Bushing	2
18		Retaining ring	4
19		Screw, M5-0.8 x 10 mm skt head cap	1
20	50066943	Stop	1
21	52066864	O-ring	1
22	52066865	Backup ring	1
23	52066863	Piston	1
24	52066862	Cylinder	1
25	52065528	Decal, ID	1
26	52065823	Coupler kit, 3/8" male	1
	50118374	Adapter lock kit (includes 3, 16, 17)	
	52063244	Pin kit (includes 14 and two of item 18)	



4455 Boeing Drive • Rockford, IL 61109-2988 • USA • 815-397-7070
An ISO 9001 Company • Greenlee Textron Inc. is a subsidiary of Textron Inc.

USA Tel: 800-435-0786 Fax: 800-451-2632
Canada Tel: 800-435-0786 Fax: 800-524-2853
International Tel: +1-815-397-7070 Fax: +1-815-397-9247

www.greenlee.com