INSTRUCTION MANUAL

GREENLEE®
UTILITY
A Textron Company

Serial Number

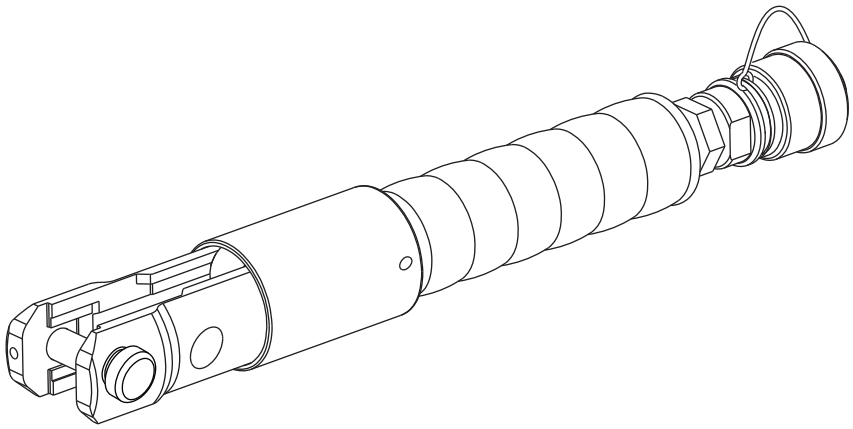

GATOR® RK425 Remote Crimping Tool

6-ton • Single-acting

Read and **understand** all of the instructions and safety information in this manual before operating or servicing this tool.

Register this product at www.greenlee.com

52065530 REV 2
© 2014 Greenlee Textron Inc.
7/14

Table of Contents

Description 2
Safety 2
Purpose of this Manual 2
Important Safety Information 3–4
Identification 5
Specifications 5
Operation 6–7
Die and Connector Selection 8
Maintenance 9
Illustrations and Parts Lists 10–12

Description

The RK425 6-ton, Single-acting, Remote Crimping Tool is a hand-held crimping tool with removable crimping jaws. The single-acting ram requires hydraulic pressure to advance, and uses an internal spring to return.

This crimping tool requires an external 10,000 psi (700 bar) hydraulic power source, such as Greenlee 975, 976-22, 980, 980-22, and EHP700. The RK425 may also be powered using a hydraulic intensifier capable of developing 10,000 psi (700 bar), such as the Greenlee Utility Dynapress® intensifier.

Safety

Safety is essential in the use and maintenance of Greenlee Utility tools and equipment. This manual and any markings on the tool provide information for avoiding hazards and unsafe practices related to the use of this tool. Observe all of the safety information provided.

Purpose of this Manual

This manual is intended to familiarize all personnel with the safe operation and maintenance procedures for the following Greenlee Utility tool:

RK425 Remote Crimping Tool

Keep this manual available to all personnel.

Replacement manuals are available upon request at no charge at www.greenlee.com.

Do not discard this product or throw away!
For recycling information, go to www.greenlee.com.

All specifications are nominal and may change as design improvements occur. Greenlee Textron Inc. shall not be liable for damages resulting from misapplication or misuse of its products.

Dynapress and GATOR are registered trademarks of Textron Innovations Inc.

Blackburn is a registered trademark of Thomas & Betts.

KEEP THIS MANUAL

IMPORTANT SAFETY INFORMATION

SAFETY ALERT SYMBOL

This symbol is used to call your attention to hazards or unsafe practices which could result in an injury or property damage. The signal word, defined below, indicates the severity of the hazard. The message after the signal word provides information for preventing or avoiding the hazard.

⚠DANGER

Immediate hazards which, if not avoided, WILL result in severe injury or death.

⚠WARNING

Hazards which, if not avoided, COULD result in severe injury or death.

⚠CAUTION

Hazards or unsafe practices which, if not avoided, MAY result in injury or property damage.



⚠DANGER

Read and understand all of the instructions and safety information in this manual before operating or servicing this tool.

Failure to observe this warning will result in severe injury or death.

⚠DANGER

Do not use this crimping tool with any hydraulic hoses or other hydraulic components rated at less than 10,000 psi (700 bar).

Failure to observe this warning will result in severe injury or death.



⚠WARNING

Electric shock hazard:

This tool is not insulated. When using this unit on or near energized electrical lines, use proper personal protective equipment.

Failure to observe this warning could result in severe injury or death.

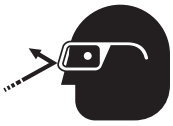

⚠WARNING

Wear eye protection when operating or servicing this tool.

Failure to wear eye protection could result in serious eye injury from flying debris or hydraulic oil.



⚠WARNING

Skin injection hazard:

Do not use hands to check for oil leaks. Oil under pressure easily punctures skin. If injured, seek medical attention immediately to remove oil.

Failure to observe this warning could result in serious injury, gangrene, or death.



⚠WARNING

Do not use solvents or flammable liquids to clean the tool body. Solvents or flammable liquids could ignite and cause serious injury or property damage.

IMPORTANT SAFETY INFORMATION

⚠WARNING

An incomplete crimp can cause a fire.

Use proper die, connector, and cable combinations. Improper combinations can result in an incomplete crimp.

Failure to observe this warning could result in severe injury or death.



⚠WARNING

Pinch points:

Keep hands away from the crimping tool head when crimping.

Failure to observe this warning could result in severe injury or death.

⚠WARNING

Inspect tool and dies before use. Replace any worn or damaged parts. A damaged or improperly assembled tool can break and strike nearby personnel.

Failure to observe this warning could result in severe injury or death.

⚠CAUTION

Do not perform any service or maintenance other than as described in this manual. Injury or damage to the tool may result.

Failure to observe this precaution may result in injury and property damage.

IMPORTANT

Follow the operating instructions and safety information supplied with the hydraulic power source.

Note: Keep all decals clean and legible, and replace when necessary.

Identification

1. Lock Pin
2. 3/8" Male Screw-type Coupler

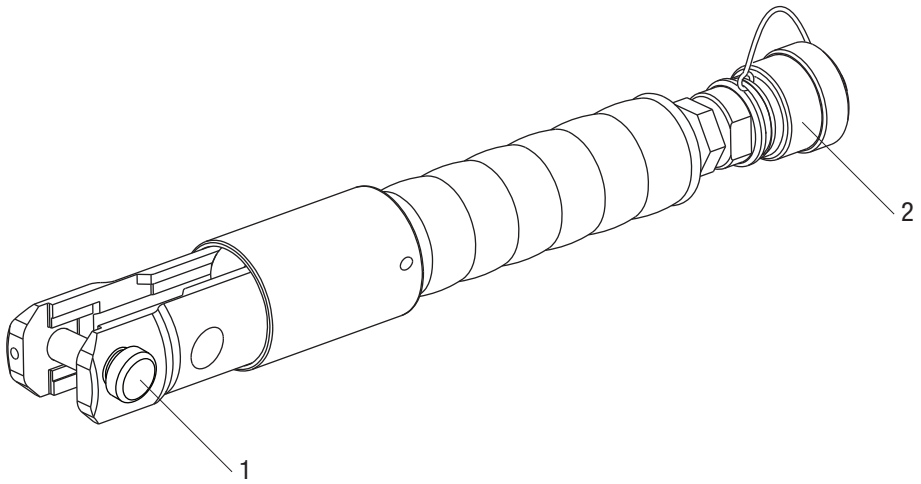

Specifications

Length	12.6" (320.0 mm)
Diameter	2.3" (58.4 mm)
Weight	2.0 lb (0.91 kg)
Crimping Force	6 tons (53 kN)

Operation

⚠WARNING

Inspect tool and dies before use. Replace any worn or damaged parts. A damaged or improperly assembled tool can break and strike nearby personnel.

Failure to observe this warning could result in severe injury or death.



⚠WARNING

Electric shock hazard:

This tool is not insulated. When using this unit on or near energized electrical lines, use proper personal protective equipment.

Failure to observe this warning could result in severe injury or death.



⚠WARNING

Wear eye protection when operating or servicing this tool.

Failure to wear eye protection could result in serious eye injury from flying debris or hydraulic oil.



⚠WARNING

Pinch points:

Keep hands away from the crimping tool head when crimping.

Failure to observe this warning could result in severe injury or death.

⚠WARNING

Use proper die, connector, and wire combinations.

Mismatched components can result in an incomplete crimp. Failure to complete a crimp could result in severe injury, death, or fire if a connection separates or if it has high electrical resistance.

IMPORTANT

Follow the operating instructions and safety information supplied with the hydraulic power source.

Operation (cont'd)

Die Selection

Interchangeable dies may be used in the standard die opening. Dies that may be used include:

- Greenlee KD6 series
- Burndy W and X series
- ILSCO ND series
- Huskie HT58 series
- Panduit CD-2001 series
- Other industry W-type dies

Installing Dies

1. Select the proper dies for the connector to be crimped.
2. Install dies in jaws making certain that they are properly secured by the spring-loaded, positive lock, die buttons.

Preparing Cable

Follow the lug manufacturer's instructions for appropriate cable strip length.

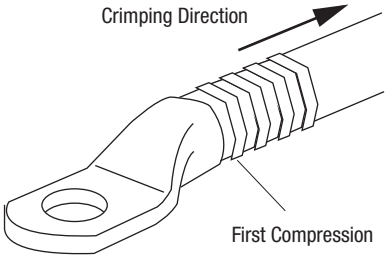

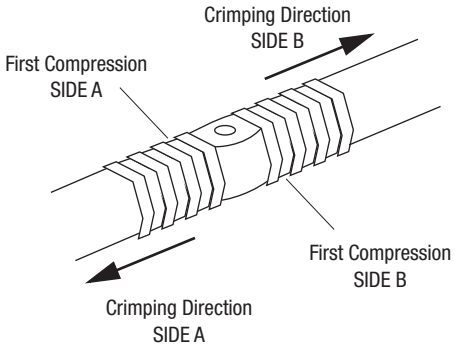

Crimping Procedure

1. Insert conductor into the connector and align the tool and die on the connector. Start in the center for splices and "H" frames; and on the end, nearest the pad, for terminals.
2. Activate the hydraulic power source until the ram has advanced and the crimp is completed.

   Note: To ensure a complete crimp, verify that the power source has reached 10,000 psi (700 bar). Refer to the "Periodic Relief Valve Check" in this manual.
3. Stop the power source and allow the ram to retract.
4. Continue crimping the connector until the correct number of crimps has been completed. Work from the center to the outer edges for splices and "H" frame connectors, alternating sides if possible, for the best compression connections.

⚠WARNING

An incomplete crimp can cause a fire.

Use proper die, connector, and cable combinations. Improper combinations can result in an incomplete crimp.

Failure to observe this warning could result in severe injury or death.

CJ22 Jaw and KA22/KC22-type Die Selection

Note: This tool will provide a cUL and UL classified crimp ONLY when used with the CJ22 jaws and KA22- or KC22-type dies.

Note: This tool will provide 53 kN (6 tons) of crimping force when used with the CJ22 jaws.

Crimps made on copper cable with Greenlee KC22-type dies and the copper connectors listed here are cUL and UL classified.

Crimps made on copper or aluminum cable with Greenlee KA22-type dies and the dual-rated aluminum connectors listed here are cUL and UL classified.

Refer to "Connector Selection" for brand names and model numbers of appropriate lugs as well as crimping instructions.

Dies for Copper Connectors

Catalog Number	UPC Number	Cable Size	Color Code
KC22-8	03079	8 AWG	Red
KC22-6	03080	6 AWG	Blue
KC22-4	03081	4 AWG	Gray
KC22-2	03082	2 AWG	Brown
KC22-1	03083	1 AWG	Green
KC22-1/0	03084	1/0 AWG	Pink
KC22-2/0	03085	2/0 AWG	Black
KC22-3/0	03086	3/0 AWG	Orange
KC22-4/0	03087	4/0 AWG	Purple
KC22-250	03088	250 kcmil	Yellow
KC22-300	03089	300 kcmil	White
KC22-350	03090	350 kcmil	Red
KC22-400	03091	400 kcmil	Blue
KC22-500	03092	500 kcmil	Brown
KC22-600B	03094	600 kcmil	Green

Dies for Dual-rated Aluminum Connectors

Catalog Number	UPC Number	Cable Size
KA22-8	06744	8 AWG
KA22-6	06745	6 AWG
KA22-4	06746	4 AWG
KA22-2	06747	2 AWG
KA22-1	06749	1 AWG
KA22-1/0	06750	1/0 AWG
KA22-2/0	06751	2/0 AWG
KA22-3/0	06752	3/0 AWG
KA22-4/0	06753	4/0 AWG
KA22-250	06754	250 kcmil
KA22-300	06755	300 kcmil
KA22-350	06756	350 kcmil

Connector Selection

CJ22 Crimping Jaw Range: Copper — 8 AWG to 600 kcmil†; Dual-rated Aluminum — 8 AWG to 350 kcmil

When used with KC22-type dies, this tool is cUL and UL classified for use with the following connector brands:

Connector Type	Barrel Type	Anderson	Blackburn®	Burndy	ILSCO	Panduit	T&B	Penn-Union†	No. of Crimps*
Copper Splice	Short	VHSS	CSP	YS-L▲	CT	SCSS/SCS	54504-54518	BCU	A
	Long	VHS	CU	YS▲	CTL	SCL/SCH	54804-54818	BBCU	
Copper Lugs	Short	VHCS	CTL-2/CTL	YA-2LN/YA-L/YA-2L YA/YA-L-TC/YA-L-2TC	CSW CRA/CRB	LCAS/LCA LCD	54104-54118 54204-54218	BLU	
	Long	VHCL	CTL-L/LCN	YA-2N	CLN/CLW CRA-L/CRB-L CRA-2L/CRB-2L	LCB/LCC	54930BE-54918BE 54850BE-54876BE	BBLU	

When used with KA22-type dies, this tool is cUL and UL classified for use with the following connector brands:

Connector Type	Barrel Type	Anderson	Blackburn®	Burndy	ILSCO	Panduit**	T&B	Penn-Union	No. of Crimps*
Dual-rated Aluminum Splice	—	VACS	ASP	YS-A	AS	SA	60501-60565	PIK	B
Dual-rated Aluminum Lugs	—	VACL	ATL	YA-A YA-ATN	ACL/ACN 2ACL/2ACN	LAA/LAB	60101-60166 60230-60267	BLUA	

95R7

* Use the number of crimps listed in the last column instead of the number provided with the connector:

A — 8 to 1/0 AWG: 1 crimp
2/0 AWG to 600 kcmil: 2 crimps

B — 8 to 2 AWG: 2 crimps
1 to 3/0 AWG: 3 crimps
4/0 AWG to 350 kcmil: 4 crimps

** 6 AWG to 350 kcmil

† 500 kcmil maximum with Penn-Union connectors

▲ 8 AWG to 350 kcmil with Burndy copper splices

Maintenance

- Keep the tool clean. Use the tool with care to keep dirt and grit out of the hydraulic system. Contamination is the most common cause of failure for hydraulic tools.
- Store the tool in its original case with the ram fully retracted.
- Occasionally lubricate the lock pin. A molybdenum disulfide grease is recommended.
- Inspect the hydraulic hoses periodically.
- Periodically verify that the power source reaches 10,000 psi (700 bar). Refer to the “Periodic Relief Valve Check” in this manual.

Periodic Relief Valve Check



⚠WARNING

Skin injection hazard:

- Do not use fingers or hands to check for leaks.
- Depressurize hydraulic system before servicing.

High pressure oil easily punctures skin causing serious injury, gangrene or death. If injured seek medical help immediately to remove oil.

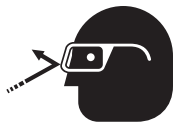

⚠WARNING

Wear eye protection when using this tool.

Failure to wear eye protection could result in serious eye injury from flying debris or hydraulic oil.



⚠WARNING

Pinch points:

Keep hands away from closing dies.

Failure to observe this warning could result in severe injury or death.

⚠WARNING

Inspect tool and dies before use. Replace any worn or damaged parts. A damaged or improperly assembled tool could break and strike nearby personnel with sufficient force to cause severe injury or death.

⚠CAUTION

- Do not operate crimping tool without dies in place. Damage to the ram or crimping tool head may result.
- Do not perform any service or maintenance other than as described in this manual. Injury or damage to the tool may result.

Periodically verify that your hydraulic power source is supplying between 9600 and 10,400 psi (662 and 717 bar).

Use a test-quality pressure gauge on the supply line from the hydraulic power source.

1. Refer to the instructions supplied with the pressure gauge.
2. Stop the flow of hydraulic oil from the power source.
3. Connect the pressure gauge to the supply line of the power source.
4. Install the set of test dies into the crimping tool.
5. Activate the power source until the ram has advanced and the power source reaches relief pressure. The pressure gauge should read between 9600 psi and 10,400 psi (662 bar and 717 bar) .
6. Release the pressure by stopping flow from your power source. The ram will retract.

If crimp pressures are low, the hydraulic power source relief valve may need adjustment.

IMPORTANT

Relief valve adjustments must be performed according to the instructions provided with the hydraulic power source.

Illustration and Parts List—RK425

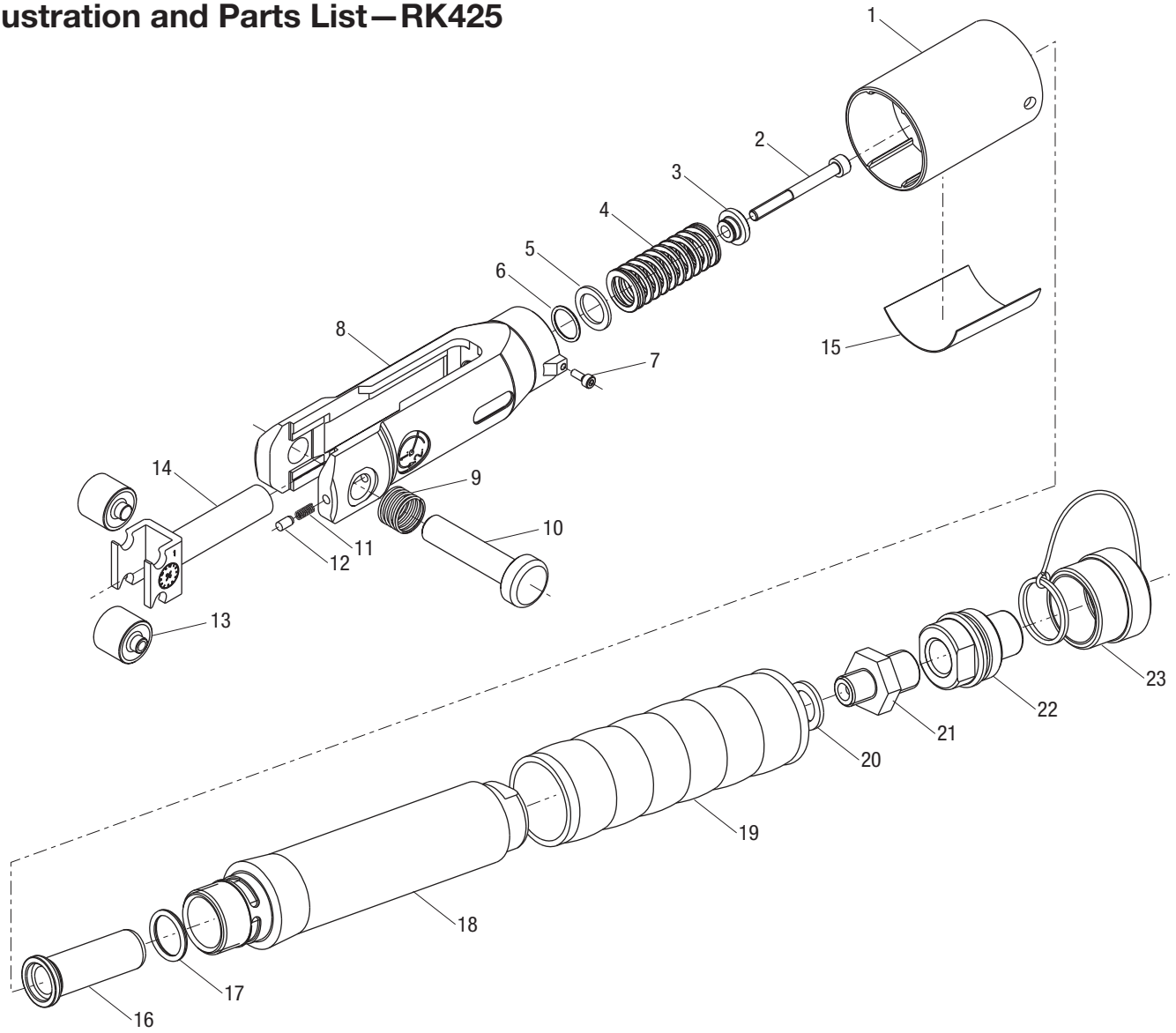

Key	Part No.	Description	Qty
1	52065902	Sheath	
	52049399	Spring kit (includes 2–6)	
2		Bolt, shoulder	1
3		Disc	1
4		Compression spring	1
5		Washer	1
6		O-ring	1
7	52057496	Screw	1
8	50032631	Jaw holder	1
	52049400	Latch kit (includes 9–12)	
9		Compression spring	1
10		Locking pin	1
11		Compression spring	1
12		Pin	1

Key	Part No.	Description	Qty
	52049401	Roller kit (includes 13 and 14)	
13		Roller	2
14		Ram	1
15	52065527	Decal, ID	1
16	52065868	Piston	1
17	52065869	Seal	1
18	52065870	Cylinder	1
19	52065901	Grip	1
	52065823	3/8" male coupler kit (includes 20–23)	
20		Seal	1
21		Fitting	1
22		Coupler	1
23		Cap	1
	52067054	Tag, connector chart	1

Illustration and Parts List—Crimping Jaw Units

CJD3BG

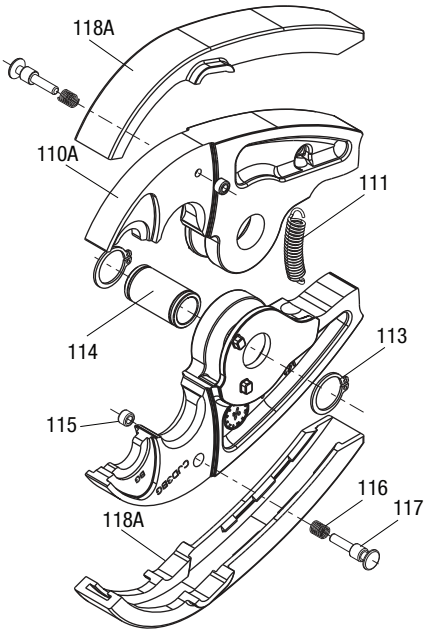

CJD3O

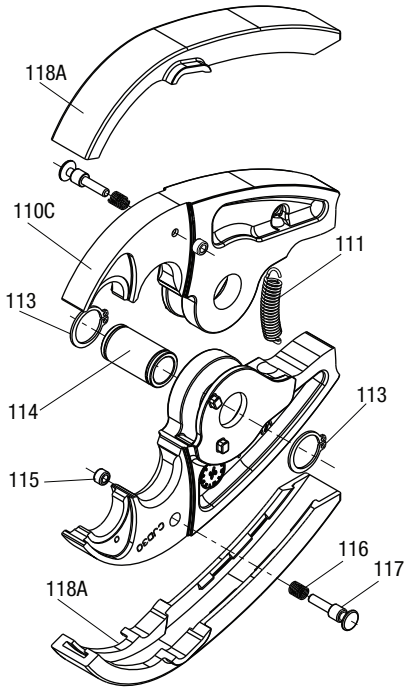

CJD3

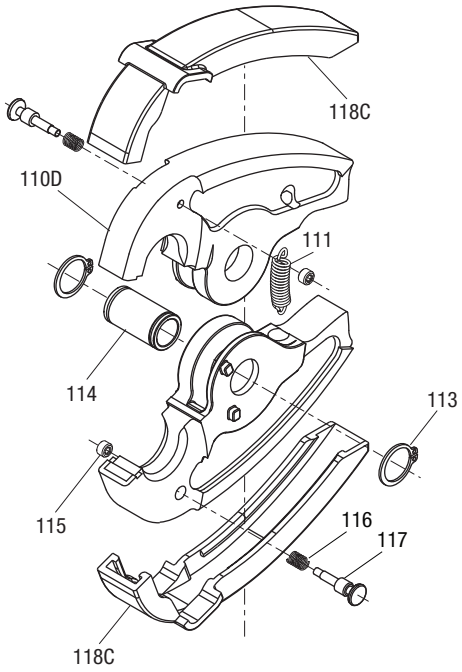

Key	Part No.	Description	Qty
	52027121	**CJD3BG crimping jaw unit** (includes 110–118)	
	52027122	**CJD3O crimping jaw unit** (includes 110–118)	
	52024068	**CJD3 crimping jaw unit** (includes 110–118)	
	52020114	**CJK Kearney crimping jaw unit** (includes 110–118, 119-121)	
110A		Jaw, CJD3BG	2
110B		Jaw, CJK	2
110C		Jaw, CJD3O	2
110D		Jaw, CJD3	2
111	52022544	Extension spring	1
	52049402	Jaw pivot kit (includes 113 and 114)	
113		Retaining ring	2
114		Pin pivot	1
115		Bushing	2
116		Compression spring	2
117		Lock adapter	2
118A	52025125	Jaw covers, CJD3O/CJD3BG (set of 2)	1
118B	52022386	Jaw covers, CJK (set of 2)	1
118C	52021086	Jaw covers, CJD3 (set of 2)	1
119		Bushing	2
120		Ball, 3 mm	2
121		Locking pin	1
	50103750	Die pin kit, “W”-style dies (includes 115–117)	
	50105108	Die pin kit, Kearney-style dies (includes 116, 119–121)	

CJK Kearney

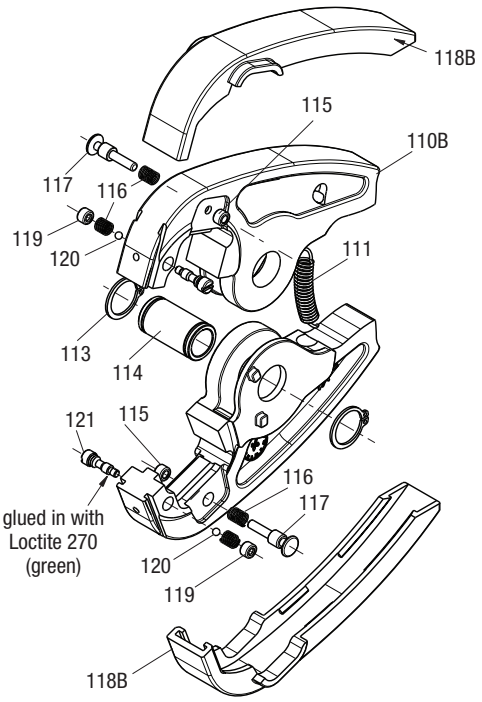

Illustration and Parts List—Optional Accessories

CJ22

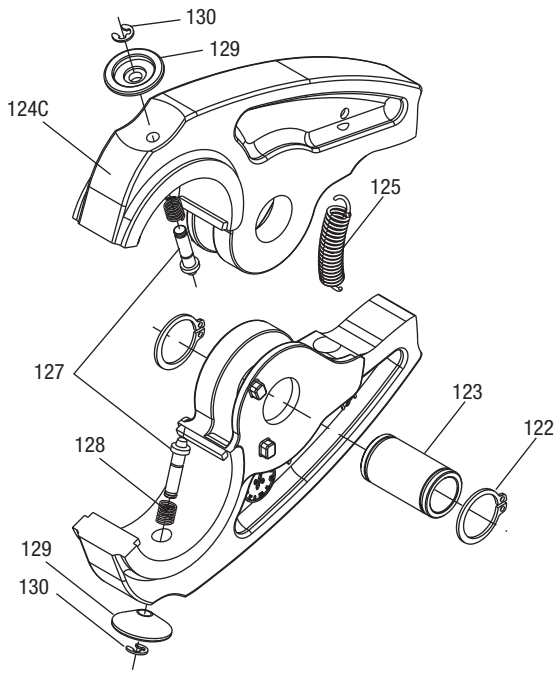

CJXPJ

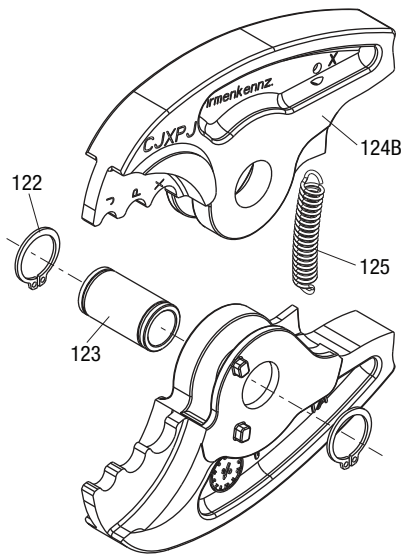

Key	Part No.	Description	Qty
	52024683	**CJ22 crimping jaw unit** for cUL and UL classified crimps—refer to "Connector Selection" for details	
	52025649	**CJXPJ crimping jaw unit** (includes 122-125)	
	52025648	**CJB single-use lock cutter** (includes 122-126)	
	52049402	Jaw pivot kit (includes 122 and 123)	
122		Retaining ring	2
123		Pivot pin	1
124A		Jaw, sharp—CJB	1
124B		Jaw, CJXPJ	2
124C		Jaw, CJ22	2
125	52022544	Extension spring	1
126		Jaw, flat—CJB	1
	52023623	Die retaining pin kit (includes 127–130)	
127		Die retaining pin	2
128		Compression spring	2
129		Release button	2
130		Retaining ring	2

CJB

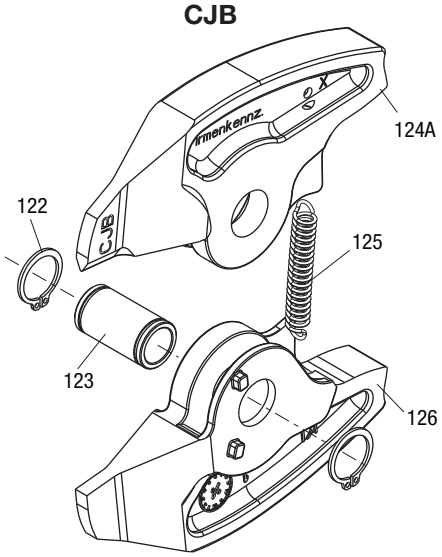

GREENLEE
A Textron Company

4455 Boeing Drive • Rockford, IL 61109-2988 • USA • 815-397-7070
An ISO 9001 Company • Greenlee Textron Inc. is a subsidiary of Textron Inc.

USA Tel: 800-435-0786 Fax: 800-451-2632
Canada Tel: 800-435-0786 Fax: 800-524-2853
International Tel: +1-815-397-7070 Fax: +1-815-397-9247

www.greenlee.com