ELKAY®
SPECIFICATIONS

Elkay Outdoor EZH2O Bottle Filling Station Pedestal Non-Filtered Non-Refrigerated Freeze Resistant
Model LK4410BFFRK

PRODUCT SPECIFICATIONS

Elkay Outdoor ezH2O® Bottle Filling Station Pedestal, Non-Filtered Non-Refrigerated Freeze Resistant. Features shall include 316 Stainless, Laminar Flow, Heavy Duty Vandal-Resistant, Freeze Resistant. Mechanical Front Bubbler Button activation. Product shall be Floor Mount/Freestanding, for Outdoor applications, serving 1 station(s). Unit shall be lead-free design which is certified to NSF/ANSI 61 & 372 (lead free) and meets Federal and State low-lead requirements.

Special Features:	316 Stainless, Laminar Flow, Heavy Duty Vandal-Resistant, Freeze Resistant
Finish:	Beige (BGE), Black (BLK), Blue (BLU), Brown (BRN), Evergreen (EVG), Gray (GRY), Orange (ORN), Purple (PUR), Red (RED), Terracotta (TER), White (WHT), Yellow (YLW)
Power:	No Electrical Required
Bubbler Style:	No Bubbler
Activation by:	Mechanical Front Bubbler Button
Mounting Type:	Floor Mount/Freestanding
Chilling Option:	Non-Refrigerated
Dimensions (L x W x H):	14" x 31" x 57"
Approx. Shipping Weight:	222 lbs.
Installation Location:	Outdoor
No. of Stations Served:	1

Special Note: Choose from 12 color options

- Mechanically-Activated bubbler continues to supply water in event of service disruptions.
- Laminar flow provides clean fill with minimal splash.
- Base material constructed from marine-grade 316 stainless steel provides the ultimate corrosion protection from even the most corrosive elements.
- Heavy Duty Vandal-Resistant:
  - Tamper resistant screws
  - Resists stains and corrosion
  - Heavy-gauge construction
- Freeze Resistant:
  - Depending on specific installation, freeze resistant system is located either below frost line or in temperature controlled space.





AMERICAN PRIDE. A LIFETIME TRADITION.
Like your family, the Elkay family has values and traditions that endure. For almost a century, Elkay has been a family-owned and operated company, providing thousands of jobs that support our families and communities.

Included with Product: Outdoor Bottle Filler, Freeze Resistant Valve

▼ Ships in multiple boxes.

PRODUCT COMPLIANCE

ADA & ICC A117.1

Buy American Act

GreenSpec®

NSF/ANSI 61 & 372 (lead free)

Complies with ADA & ICC A117.1 accessibility requirements when installed according to the requirements outlined in these standards. Installation may require additional components and/or construction features to be fully compliant. Consult the local Authority Having Jurisdiction if necessary.

Installation Instructions (PDF)

Warranty pertains to drinking water applications only. Non-drinking water applications are not covered under warranty.

Warranty (PDF)

OPTIONAL ACCESSORIES

LK4471LHB - Locking Hose Bib
97890C - Accessory - Direct Bury Adaptor

PART:_____QTY: _____

PROJECT:_____

CONTACT:_____

DATE:_____

NOTES:_____

APPROVAL:_____

In keeping with our policy of continuing product improvement, Elkay reserves the right to change product specifications without notice. Please visit elkay.com for the most current version of Elkay product specification sheets. This specification describes an Elkay product with design, quality, and functional benefits to the user. When making a comparison of other producers' offerings, be certain these features are not overlooked.

© 2018

Elkay Outdoor EZH2O Bottle Filling Station Pedestal Non-Filtered Non-Refrigerated Freeze Resistant
Model LK4410BFFRK

MOUNTING INSTRUCTIONS and PLUMBING CONNECTIONS

Site and drainage excavation is required for fountain installation. Refer to owner's manual for site preparation details. Provide solid, well-drained smooth, flat, finished surface to mount pedestal fountain (concrete pad recommended) with adequate support (300 lb. load minimum). (6) 3/8" minimum fasteners (not included) should be attached securely to mounting surface in order to secure fountain, (Refer to rough-in diagram), and be sure to allow an opening for the freeze-resistant valve in the ground as shown in the installation instructions that accompany the fountain. (Refer to the rough-in diagram below). Refer to local codes for any additional requirements.

Locate and install plumbing through ground as required. Assemble fountain to prepared site and mounting pad.

Locate and install plumbing through ground as required.

NOTE: Unit is not furnished with service valve.

Position pedestal over plumbing and secure base to fasteners. Remove access panels and connect supply and water lines. Turn on water supply and check for leaks. Reassemble access panels to pedestal.

Trap and service stop not included.

SANITARY FREEZE-RESISTANT VALVE GROUND INSTALL DETAIL

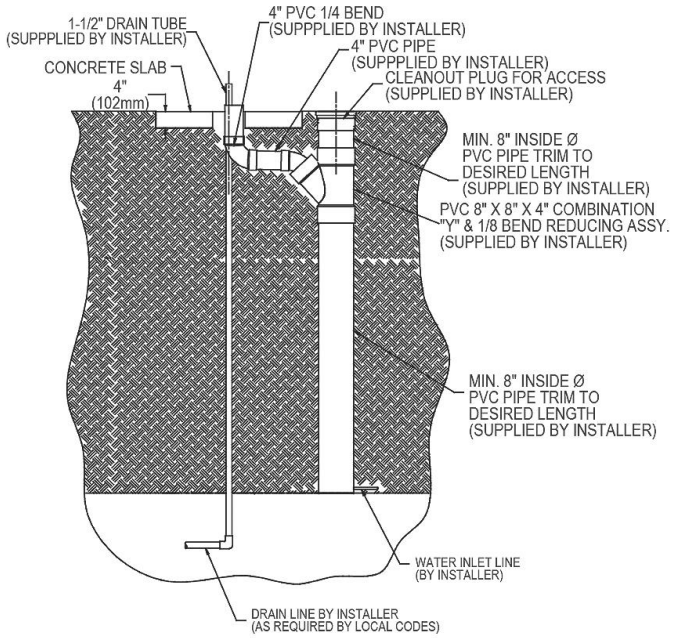

LEGEND
A = Access panel (8" X 10")
B = Removable bottom cover

OPERATING PRESSURES:

Supply water 20 – 105 psi maximum

TOP VIEW

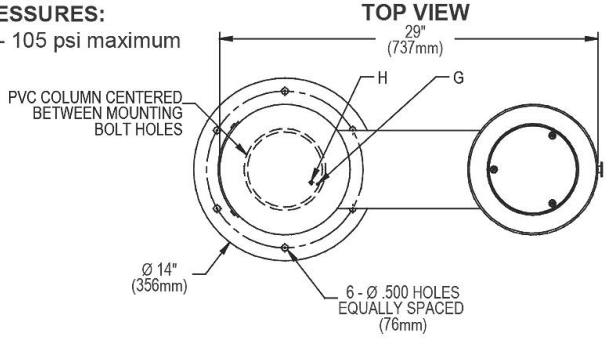

SIDE & FRONT VIEWS

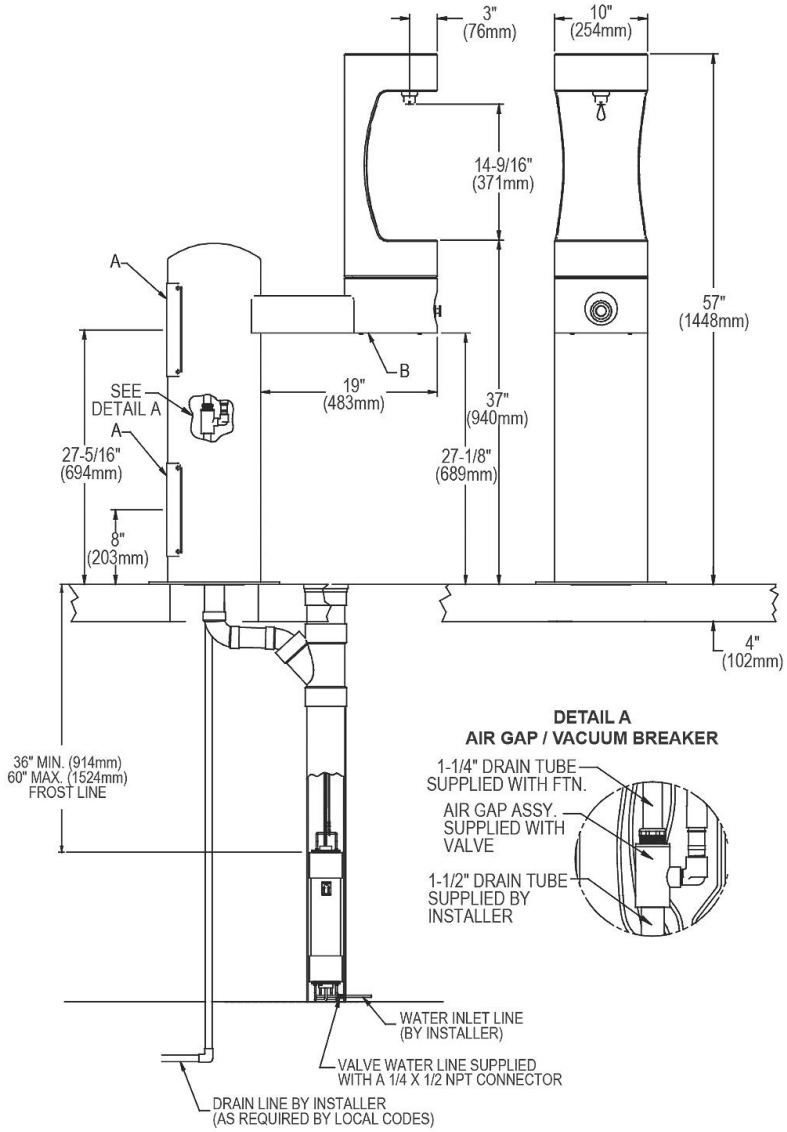

DETAIL A
AIR GAP / VACUUM BREAKER

In keeping with our policy of continuing product improvement, Elkay reserves the right to change product specifications without notice. Please visit elkay.com for the most current version of Elkay product specification sheets. This specification describes an Elkay product with design, quality, and functional benefits to the user. When making a comparison of other producers' offerings, be certain these features are not overlooked.