ELKAY®
SPECIFICATIONS

Elkay 8in Centerset Exposed Deck Mount Faucet 44in Flexible Hose w/1.2 GPM Spray Head 2in Lever Handles 1.2 GPM Spray Head

Model(s) LK843LC

PRODUCT SPECIFICATIONS

Elkay 8in Centerset Exposed Deck Mount Faucet 44in Flexible Hose w/1.2 GPM Spray Head 2in Lever Handles 1.2 GPM Spray Head. Faucet has a flow rate of 1.2 GPM, and is made of Chrome Plated Brass material, with a Quarter Turn Ceramic Disc valve. Faucet requires 3 faucet holes.

Mounting Type:	Wall Mount
Special Features:	Low Flow Solid Brass Construction
Spray Type:	Pre Rinse
Finish:	Chrome (CR)
Handle Type:	Lever Handle
Spout Reach:	30"
Spout Height:	41-1/8"
Hole Drillings:	3
Material:	Chrome Plated Brass
Valve Type:	Quarter Turn Ceramic Disc
Valve Connection:	1/2"-14 NPT
Flow Rate:	1.2 GPM
Faucet Hole Spread:	8
Spout Swing Rotation:	360°
Spout Type:	Flexible Spout

Special Note: 1.2 GPM spray head



Chrome
(CR)



AMERICAN PRIDE. A LIFETIME TRADITION.
Like your family, the Elkay family has values and traditions that endure. For almost a century, Elkay has been a family-owned and operated company, providing thousands of jobs that support our families and communities.

Product Compliance: ADA & ICC A117.1
ASME A112.18.1/CSA B125.1
NSF 61
NSF 372 (lead free)

Clean and Care Manual (PDF)
Installation Instructions (PDF)
Limited Warranty (PDF)

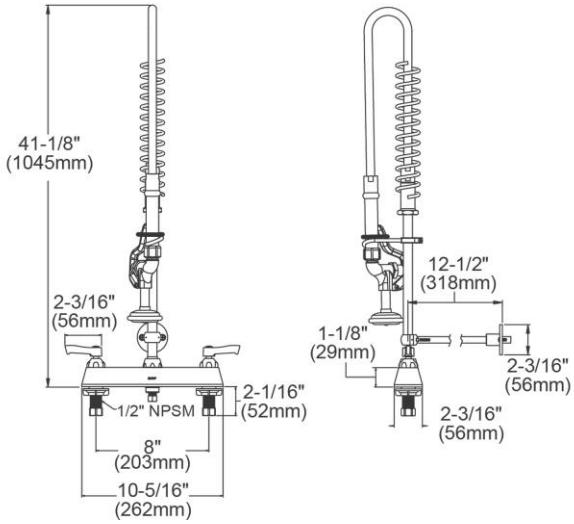

PART:_____QTY: _____

PROJECT:_____

CONTACT:_____

DATE:_____

NOTES:_____

APPROVAL:_____

In keeping with our policy of continuing product improvement, Elkay reserves the right to change product specifications without notice. Please visit elkay.com for the most current version of Elkay product specification sheets. This specification describes an Elkay product with design, quality, and functional benefits to the user. When making a comparison of other producers' offerings, be certain these features are not overlooked.

© 2018

ELKAY®
SPECIFICATIONS

Elkay 8in Centerset Exposed Deck Mount Faucet 44in Flexible Hose w/1.2 GPM Spray Head 2in Lever Handles 1.2 GPM Spray Head

Model(s) LK843LC

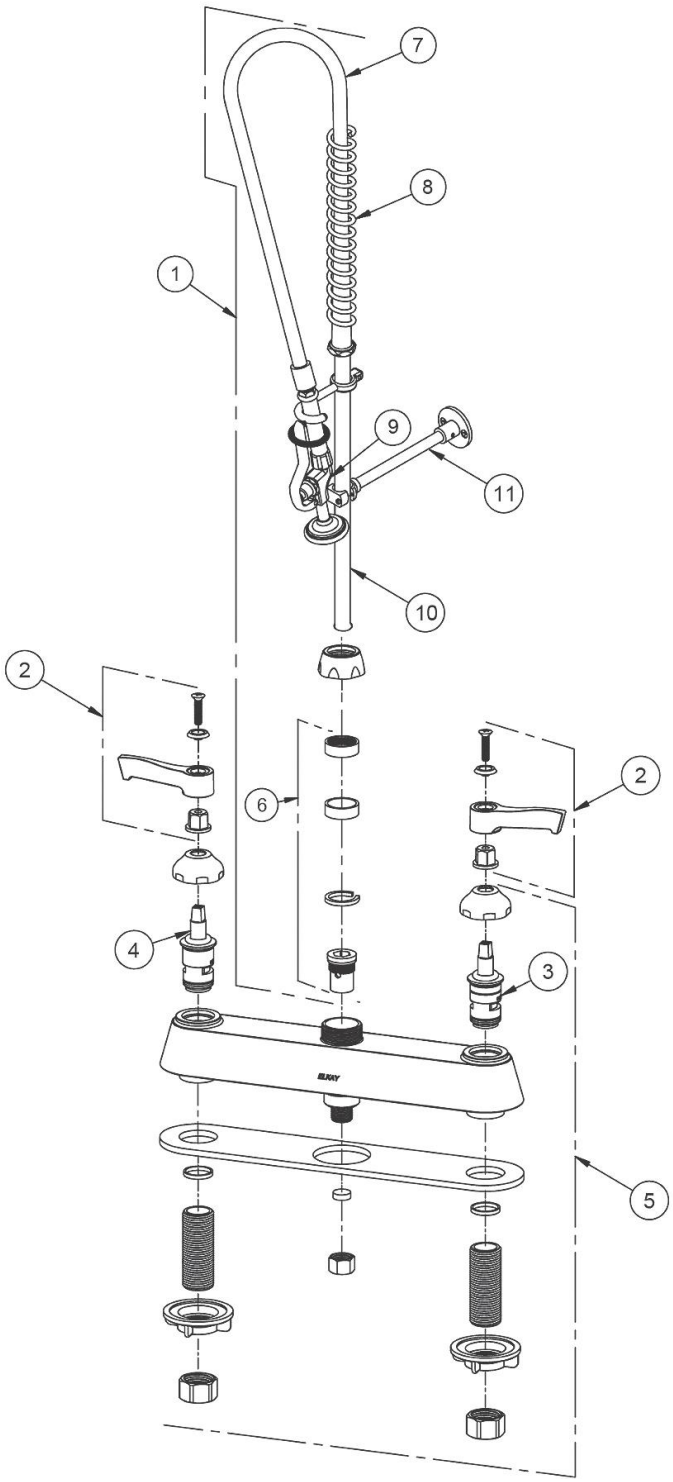

ITEM	IND. PART	DESCRIPTION
1	45947C	Pre-Rinse Assembly Low Flow
2	45918C	Handle, 2"
3	45923C	Right Cold Cartridge
4	45924C	Left Hot Cartridge
5	98554C	Backflow Kit
6	45915C	Body
7	45943C	44" Hose
8	45944C	Spring
9	45942C	Spray Valve
10	45945C	Tall Riser
11	45946C	Support Rod

In keeping with our policy of continuing product improvement, Elkay reserves the right to change product specifications without notice. Please visit elkay.com for the most current version of Elkay product specification sheets. This specification describes an Elkay product with design, quality, and functional benefits to the user. When making a comparison of other producers' offerings, be certain these features are not overlooked.