ELKAY®
SPECIFICATIONS

# Elkay 8" Centerset Deck Mount Laminar Flow Faucet with 8" Gooseneck Spout 2" Lever Handles 1/2 Offset Inlets+Stop

## Model(s) LK940LGN08L2S

## PRODUCT SPECIFICATIONS

Elkay 8" Centerset Deck Mount Laminar Flow Faucet with 8" Gooseneck Spout 2" Lever Handles 1/2 Offset Inlets+Stop. Faucet has a flow rate of 1.5 GPM, and is made of Chrome Plated Brass material, with a Quarter Turn Ceramic Disc valve. Faucet requires 2 faucet holes.

| | |
|---|---|
| **Mounting Type:** | Wall Mount |
| **Special Features:** | Low Flow<br>Solid Brass Construction<br>Spout swing restriction pin<br>1/2" adjustable inlets with integral stops |
| **Finish:** | Chrome (CR) |
| **Handle Type:** | 2" Lever Handle |
| **Deck Clearance:** | 9" |
| **Spout Reach:** | 8" |
| **Spout Height:** | 14-1/2" |
| **Hole Drillings:** | 2 |
| **Material:** | Chrome Plated Brass |
| **Valve Type:** | Quarter Turn Ceramic Disc |
| **Valve Connection:** | ShutOff Valve 1/2" NPT FM Inlt |
| **Flow Rate:** | 1.5 GPM |
| **Faucet Hole Spread:** | 8 |
| **Spout Type:** | Gooseneck |

**Special Note:** 1.5 GPM VR aerator installed with 2.2 and .5 GPM inserts included



Chrome
(CR)



**Included with Product:** **Shut-off**

AMERICAN PRIDE. A LIFETIME TRADITION.
Like your family, the Elkay family has values and traditions that endure. For almost a century, Elkay has been a family-owned and operated company, providing thousands of jobs that support our families and communities.

**Product Compliance:** ADA & ICC A117.1
ASME A112.18.1/CSA B125.1
NSF 61
NSF 372 (lead free)

Complies with ADA & ICC A117.1 accessibility requirements when installed according to the requirements outlined in these standards.

Clean and Care Manual (PDF)
Installation Instructions (PDF)
Limited Warranty (PDF)

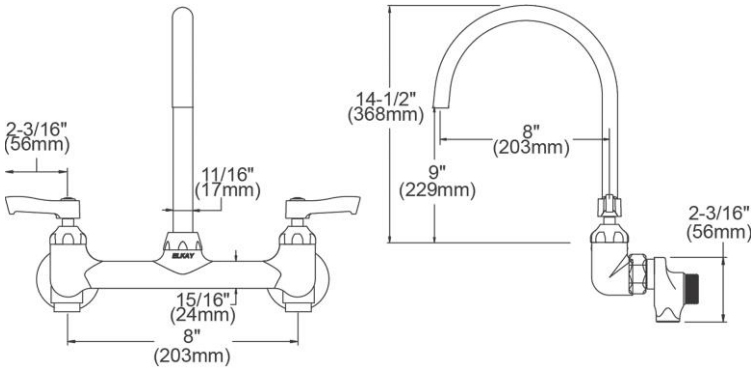


PART:_____QTY: _____

PROJECT:_____

CONTACT:_____

DATE:_____

NOTES:_____

APPROVAL:

*In keeping with our policy of continuing product improvement, Elkay reserves the right to change product specifications without notice. Please visit elkay.com for the most current version of Elkay product specification sheets. This specification describes an Elkay product with design, quality, and functional benefits to the user. When making a comparison of other producers' offerings, be certain these features are not overlooked.*


© 2018

ELKAY®
SPECIFICATIONS

# Elkay 8" Centerset Deck Mount Laminar Flow Faucet with 8" Gooseneck Spout 2" Lever Handles 1/2 Offset Inlets+Stop

## Model(s) LK940LGN08L2S

| ITEM | IND. PART | DESCRIPTION |
|---|---|---|
| 1 | 1000002619 | Spout |
| 2 | 45918C | Handle, 2" |
| 3 | 45923C | Right Cold Cartridge |
| 4 | 45924C | Left Hot Cartridge |
| 5 | A55414 | 1/2" Offset Shutoff |
| 6 | 45912C | Body |

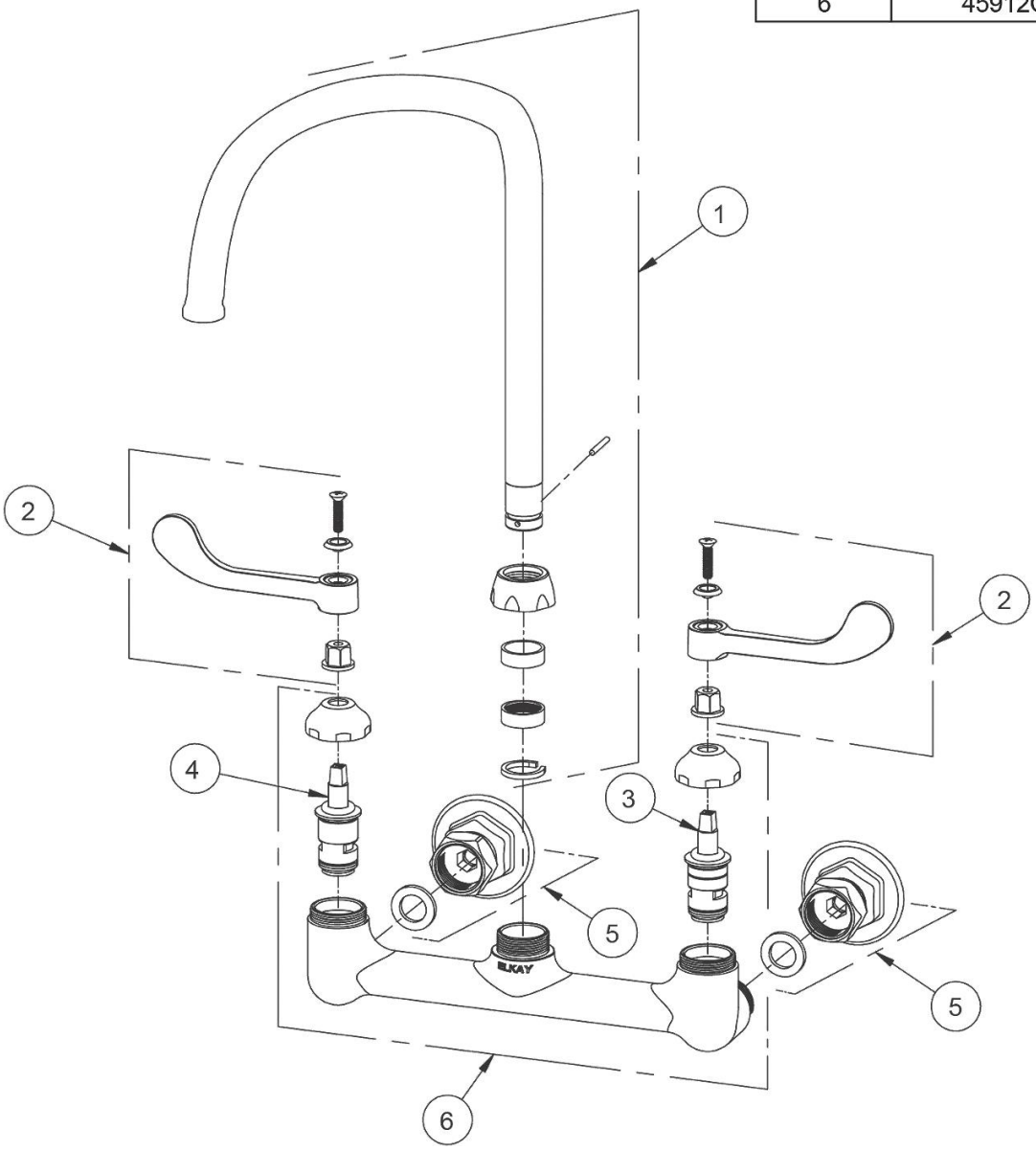


*In keeping with our policy of continuing product improvement, Elkay reserves the right to change product specifications without notice. Please visit elkay.com for the most current version of Elkay product specification sheets. This specification describes an Elkay product with design, quality, and functional benefits to the user. When making a comparison of other producers' offerings, be certain these features are not overlooked.*


© 2018