ELKAY®
SPECIFICATIONS

Elkay Everyday Three Hole Deck Mount Kitchen Faucet with Side Spray Chrome
Model(s) LK2478CR

PRODUCT SPECIFICATIONS

Elkay Everyday Three Hole Deck Mount Kitchen Faucet with Side Spray Chrome. Faucet has a flow rate of 1.5 GPM, and is made of Brass material, with a Ceramic Disc valve. Faucet requires 4 faucet holes.

Mounting Type:	Deck Mount
Special Features:	N/A
Spray Type:	Side
Finish:	Chrome (CR)
Handle Type:	Lever Handle
Deck Clearance:	4-3/4"
Spout Reach:	8-1/8"
Spout Height:	5-7/8"
Hole Drillings:	4
Material:	Brass
Valve Type:	Ceramic Disc
Valve Connection:	3/8" Female Compression Hose Assembly
Flow Rate:	1.5 GPM
Faucet Hole Size (min):	1-3/8"
Spout Swing Rotation:	360°
Spout Type:	Standard


Chrome
(CR)



AMERICAN PRIDE. A LIFETIME TRADITION.
Like your family, the Elkay family has values and traditions that endure. For almost a century, Elkay has been a family-owned and operated company, providing thousands of jobs that support our families and communities.

Product Compliance: ADA & ICC A117.1
ASME A112.18.1/CSA B125.1
NSF 61
NSF 372 (lead free)

Complies with ADA & ICC A117.1 accessibility requirements when installed according to the requirements outlined in these standards.

Clean and Care Manual (PDF)
Installation Instructions (PDF)
Limited Lifetime Warranty (PDF)

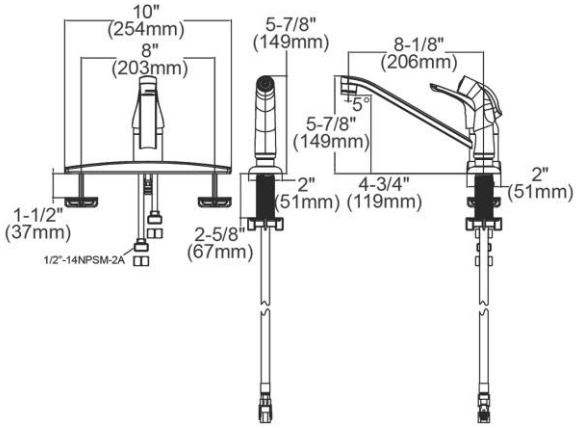

PART:_____QTY: _____

PROJECT:_____

CONTACT:_____

DATE:_____

NOTES:_____

APPROVAL:

In keeping with our policy of continuing product improvement, Elkay reserves the right to change product specifications without notice. Please visit elkay.com for the most current version of Elkay product specification sheets. This specification describes an Elkay product with design, quality, and functional benefits to the user. When making a comparison of other producers' offerings, be certain these features are not overlooked.

Elkay Everyday Three Hole Deck Mount Kitchen Faucet with Side Spray Chrome
Model(s) LK2478CR

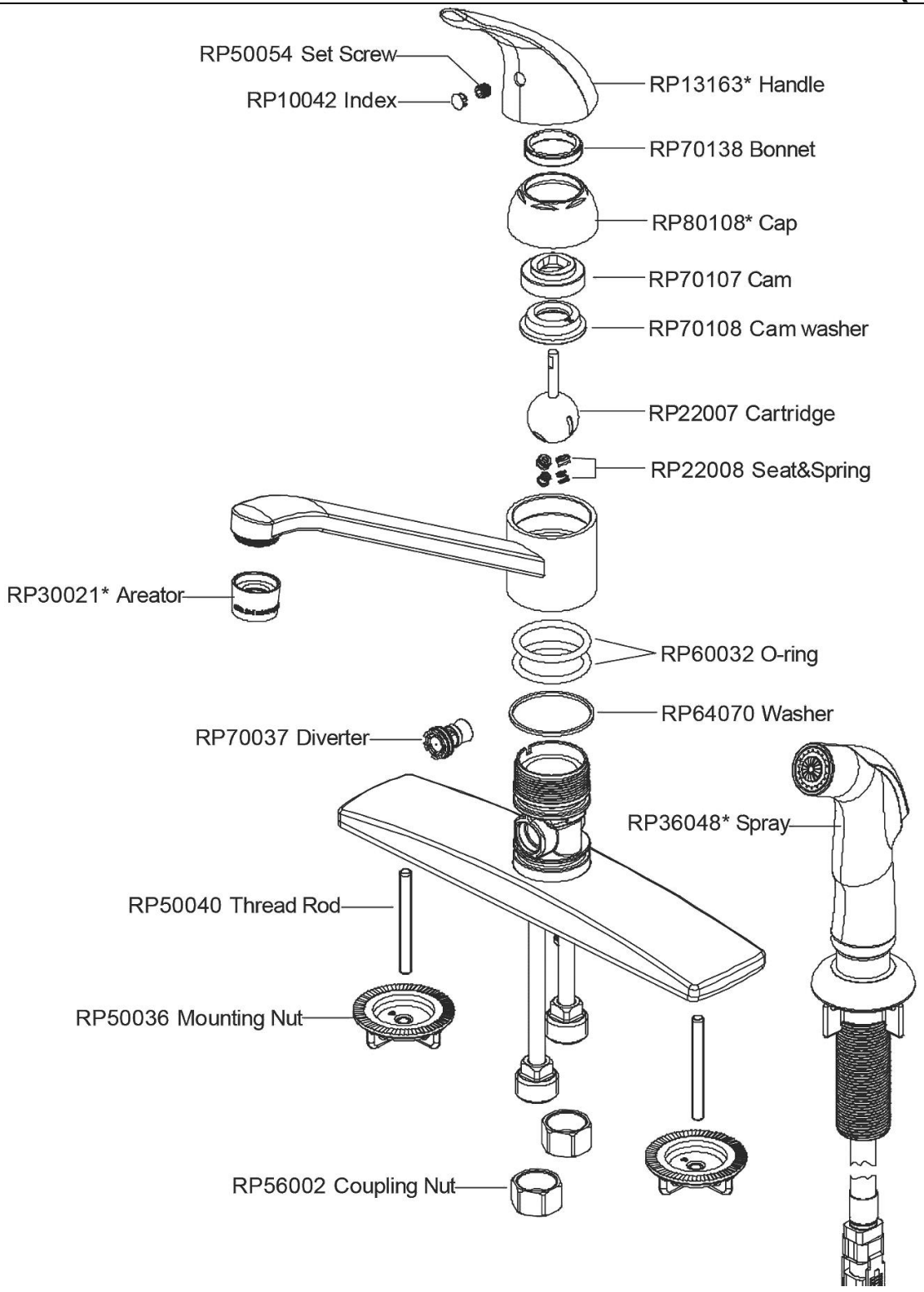

In keeping with our policy of continuing product improvement, Elkay reserves the right to change product specifications without notice. Please visit elkay.com for the most current version of Elkay product specification sheets. This specification describes an Elkay product with design, quality, and functional benefits to the user. When making a comparison of other producers' offerings, be certain these features are not overlooked.