ELKAY®
SPECIFICATIONS

Elkay Outdoor EZH2O Bottle Filling Station Bi-Level Pedestal with Pet Station Non-Filtered Non-Refrigerated
Model LK4420BF1LDB

PRODUCT SPECIFICATIONS

Elkay Outdoor ezH2O® Bottle Filling Station Bi-Level, Pedestal with Pet Station Non-Filtered Non-Refrigerated. Features shall include 316 Stainless, Laminar Flow, Heavy Duty Vandal-Resistant, Pet Fountain. Furnished with Vandal-Resistant bubbler. Mechanical Front Bubbler Button activation. Product shall be Floor Mount/Freestanding, for Outdoor applications, serving 2 station(s). Unit shall be lead-free design which is certified to NSF/ANSI 61 & 372 (lead free) and meets Federal and State low-lead requirements.

Special Features:	316 Stainless, Laminar Flow, Heavy Duty Vandal-Resistant, Pet Fountain
Finish:	Beige (BGE), Black (BLK), Blue (BLU), Brown (BRN), Evergreen (EVG), Gray (GRY), Orange (ORN), Purple (PUR), Red (RED), Terracotta (TER), White (WHT), Yellow (YLW)
Power:	No Electrical Required
Bubbler Style:	Vandal-Resistant
Activation by:	Mechanical Front Bubbler Button
Mounting Type:	Floor Mount/Freestanding
Chilling Option:	Non-Refrigerated
Dimensions (L x W x H):	26" x 31" x 64"
Approx. Shipping Weight:	205 lbs.
Installation Location:	Outdoor
No. of Stations Served:	2

Special Note: Bottle Filler Stations 1 (Low), Bubbler Stations 1 (Upper), Choose from 12 color options

- Mechanically-Activated bubbler continues to supply water in event of service disruptions.
- Laminar flow provides clean fill with minimal splash.
- Base material constructed from marine-grade 316 stainless steel provides the ultimate corrosion protection from even the most corrosive elements.
- Heavy Duty Vandal-Resistant:
  - Tamper resistant screws
  - Resists stains and corrosion
  - Heavy-gauge construction
- Vandal-resistant, bubblers are one-piece, chrome plated with integral hood guard design to prevent contamination from other users, airborne deposits and tampering.
- Pet Fountain: Features slow drainage for easy drinking.



AMERICAN PRIDE. A LIFETIME TRADITION.
Like your family, the Elkay family has values and traditions that endure. For almost a century, Elkay has been a family-owned and operated company, providing thousands of jobs that support our families and communities.

Included with Product: Outdoor Bottle Filler

PRODUCT COMPLIANCE

ADA & ICC A117.1

Buy American Act

GreenSpec®

NSF/ANSI 61 & 372 (lead free)

Complies with ADA & ICC A117.1 accessibility requirements when installed according to the requirements outlined in these standards. Installation may require additional components and/or construction features to be fully compliant. Consult the local Authority Having Jurisdiction if necessary.

Installation Instructions (PDF)

Warranty pertains to drinking water applications only. Non-drinking water applications are not covered under warranty.

Warranty (PDF)

OPTIONAL ACCESSORIES

LK4471LHB - Locking Hose Bib
97890C - Accessory - Direct Bury Adaptor

PART:_____QTY: _____

PROJECT:_____

CONTACT:_____

DATE:_____

NOTES:_____

APPROVAL:_____

In keeping with our policy of continuing product improvement, Elkay reserves the right to change product specifications without notice. Please visit elkay.com for the most current version of Elkay product specification sheets. This specification describes an Elkay product with design, quality, and functional benefits to the user. When making a comparison of other producers' offerings, be certain these features are not overlooked.

© 2018

Elkay Outdoor EZH2O Bottle Filling Station Bi-Level Pedestal with Pet Station Non-Filtered Non-Refrigerated
Model LK4420BF1LDB

MOUNTING INSTRUCTIONS and PLUMBING CONNECTIONS

Provide solid, well-drained surface to mount pedestal fountain (concrete pad recommended). Mount on a smooth, flat, finished surface with adequate support (300 lb. load minimum). Secure unit with (8) 3/8" minimum fasteners (not included). Refer to rough-in. Should be attached firmly to mounting surface in order to secure unit.

Modified low stream height bubbler for pet fountain.

Locate and install plumbing through ground as required.

NOTE: Unit is not furnished with service valve.

Position pedestal over plumbing and secure base to fasteners. Remove access panels and connect supply and water lines. Turn on water supply and check for leaks. Reassemble access panels to pedestal.

Trap and service stop not included.

OPERATING PRESSURES:
Supply water 20 – 105 psi maximum

TOP VIEW

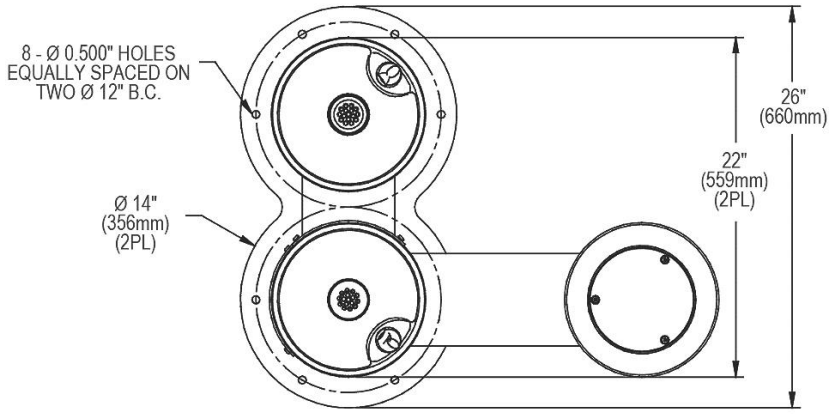

FRONT & SIDE VIEWS

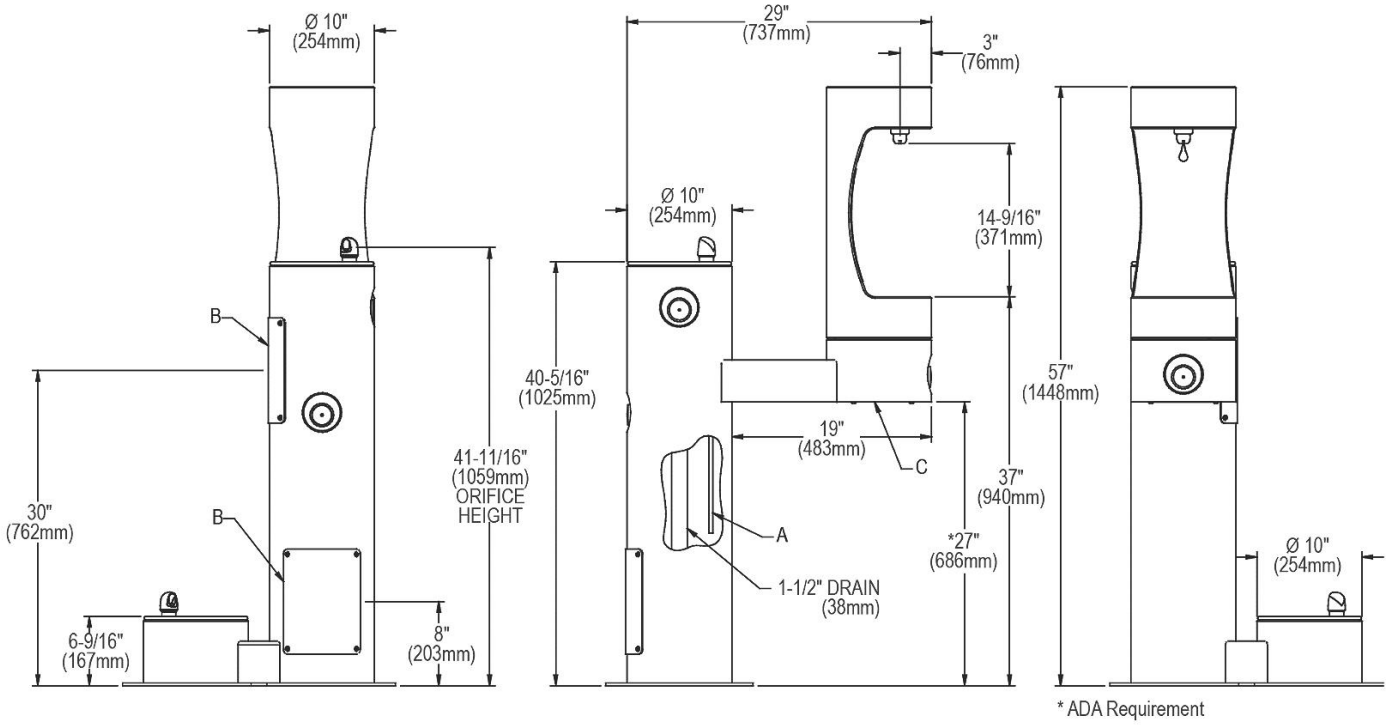

A = 3/8" O.D. Unplated copper tube connect. Shut off valve by others.
B = Access panel(8" x 10").
C = Removable bottom cover.

In keeping with our policy of continuing product improvement, Elkay reserves the right to change product specifications without notice. Please visit elkay.com for the most current version of Elkay product specification sheets. This specification describes an Elkay product with design, quality, and functional benefits to the user. When making a comparison of other producers' offerings, be certain these features are not overlooked.