ELKAY®
SPECIFICATIONS

Elkay 8" Centerset Exposed Deck Mount Faucet with Gooseneck Spout and 2-5/8" Lever Handles Chrome

Model(s) LKD2423BHC

PRODUCT SPECIFICATIONS

Elkay 8" Centerset Exposed Deck Mount Faucet with Gooseneck Spout and 2-5/8" Lever Handles Chrome. Faucet has a flow rate of 1.5 GPM, and is made of Chrome Plated Brass material, with a Quarter Turn Ceramic Disc valve. Faucet requires 3 faucet holes.

Mounting Type:	Deck Mount
Special Features:	Low Flow
Finish:	Chrome (CR)
Handle Type:	4" Lever Handle
Deck Clearance:	9-3/16"
Spout Reach:	7"
Spout Height:	13"
Hole Drillings:	3
Material:	Chrome Plated Brass
Valve Type:	Quarter Turn Ceramic Disc
Valve Connection:	1/2"-14 NPSM
Flow Rate:	1.5 GPM
Faucet Hole Size (min):	1-1/4"
Faucet Hole Spread:	8
Countertop Thickness:	1-1/8
Spout Swing Rotation:	360°
Spout Type:	Gooseneck



Chrome
(CR)



AMERICAN PRIDE. A LIFETIME TRADITION.
Like your family, the Elkay family has values and traditions that endure. For almost a century, Elkay has been a family-owned and operated company, providing thousands of jobs that support our families and communities.

Product Compliance: ADA & ICC A117.1
ASME A112.18.1/CSA B125.1
NSF 61
NSF 372 (lead free)

Complies with ADA & ICC A117.1 accessibility requirements when installed according to the requirements outlined in these standards.

Clean and Care Manual (PDF)
Installation Instructions (PDF)
Limited Warranty (PDF)

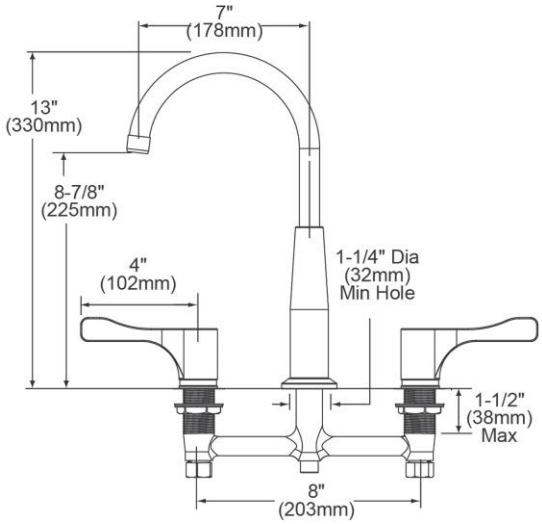

PART:_____QTY: _____

PROJECT:_____

CONTACT:_____

DATE:_____

NOTES:_____

APPROVAL:

In keeping with our policy of continuing product improvement, Elkay reserves the right to change product specifications without notice. Please visit elkay.com for the most current version of Elkay product specification sheets. This specification describes an Elkay product with design, quality, and functional benefits to the user. When making a comparison of other producers' offerings, be certain these features are not overlooked.

Elkay 8" Centerset Exposed Deck Mount Faucet with Gooseneck Spout and 2-5/8" Lever Handles Chrome

Model(s) LKD2423BHC

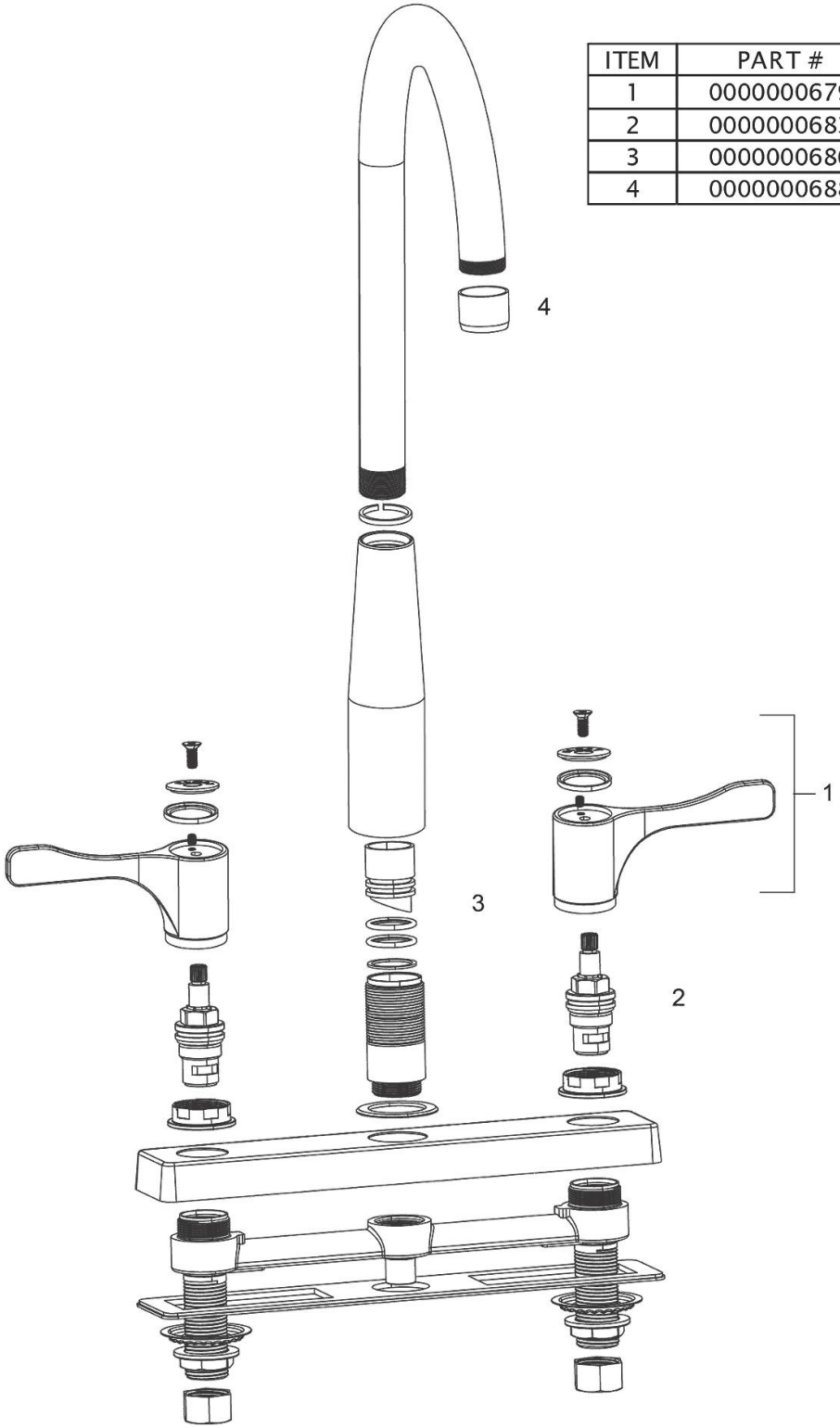

ITEM	PART #	DESCRIPTION
1	0000000679	4" Handle Kit
2	0000000683	Cartridges
3	0000000686	360° Swing Spout Repair Kit
4	0000000688	Aerator

In keeping with our policy of continuing product improvement, Elkay reserves the right to change product specifications without notice. Please visit elkay.com for the most current version of Elkay product specification sheets. This specification describes an Elkay product with design, quality, and functional benefits to the user. When making a comparison of other producers' offerings, be certain these features are not overlooked.