ELKAY®
SPECIFICATIONS

Elkay EZH2O In-Wall Bottle Filling Station
Non-Filtered 8 GPH Stainless
Model EZWSM8K

PRODUCT SPECIFICATIONS

Elkay ezH2O® In-Wall Bottle Filling Station, Non-Filtered 8 GPH Stainless. Chilling Capacity of 8.0 GPH (gallons per hour) of 50° F drinking water, based on 80° F inlet water and 90° F ambient, per ASHRAE 18 testing. Features shall include Hands-Free, Green Ticker™, Laminar Flow, Antimicrobial, Real Drain. Electronic Bottle Filler Sensor activation. Product shall be Wall Mount (In-Wall Frame/Plate), for Indoor applications, serving 1 station(s). Unit shall be certified to UL 399 and CAN/CSA C22.2 No. 120. Unit shall be lead-free design which is certified to NSF/ANSI 61 & 372 (lead free) and meets Federal and State low-lead requirements.

Special Features:	Hands-Free, Green Ticker™, Laminar Flow, Antimicrobial, Real Drain
Finish:	Stainless Steel
Power:	115V/60Hz
Bubbler Style:	No Bubbler
Activation by:	Electronic Bottle Filler Sensor
Mounting Type:	Wall Mount (In-Wall Frame/Plate)
Chilling Option*:	8.0 GPH
Full Load Amps	1
Rated Watts:	370
Dimensions (L x W x H):	19-3/4" x 3-1/2" x 40-13/16"
Approx. Shipping Weight:	77 lbs.
Installation Location:	Indoor
No. of Stations Served:	1
*Based on 80° F inlet water & 90° F ambient air temp for 50° F chilled drinking water.	

- Touchless, sensor-activation, designed for easy use.
- Green Ticker: Informs user of number of 20 oz. plastic water bottles saved from waste.
- Laminar flow provides clean fill with minimal splash.
- Silver Ion Antimicrobial protection on key plastic components to inhibit the growth of mold and mildew.
- Real Drain System eliminates standing water.

COOLING SYSTEM

- Compressor: Hermetically-sealed, reciprocating type, single phase. Sealed-in lifetime lubrication.
- Condenser: Fan cooled, copper tube with aluminum fins. Fan motor is permanently lubricated.
- Cooling Unit: Combination tube-tank type. Continuous copper tubing with is fully insulated with EPS foam that meets UL requirements for self-extinguishing material.
- Refrigerant Control: Refrigerant R-134a is controlled by accurately calibrated capillary tube.
- Temperature Control: Easily accessible enclosed adjustable thermostat is factory preset. Requires no

PART:_____QTY: _____

PROJECT:_____

CONTACT:_____

DATE:_____

NOTES:_____

APPROVAL:_____



AMERICAN PRIDE. A LIFETIME TRADITION.
Like your family, the Elkay family has values and traditions that endure. For almost a century, Elkay has been a family-owned and operated company, providing thousands of jobs that support our families and communities.

BUILT IN USA OF DOMESTIC AND FOREIGN PARTS

Included with Product: Bottle Filler (EZWSM8C) , Mounting Frame (MFWS100), Chiller (ECH8)

▼ **Ships in multiple boxes.**

PRODUCT COMPLIANCE

ADA & ICC A117.1
Buy American Act
CAN/CSA C22.2 No. 120
GreenSpec®
NSF/ANSI 61 & 372 (lead free)
UL 399

Intertek C USA

GreenSpec® LISTED www.GreenSpec.com

Complies with ADA & ICC A117.1 accessibility requirements when installed according to the requirements outlined in these standards. Installation may require additional components and/or construction features to be fully compliant. Consult the local Authority Having Jurisdiction if necessary.

Installation Instructions (PDF) - 1000003097
Installation Instructions (PDF) - 98557C
Installation Instructions (PDF) - 98560C

5 Year Limited Warranty on the refrigeration system of the unit. Electrical components and water system are warranted for 12 months from date of installation. **Warranty pertains to drinking water applications only. Non-drinking water applications are not covered under warranty.**

Warranty (PDF)

OPTIONAL ACCESSORIES

EWF3000 - WaterSentry Plus Filter System Kit (Bottle Fillers)

In keeping with our policy of continuing product improvement, Elkay reserves the right to change product specifications without notice. Please visit elkay.com for the most current version of Elkay product specification sheets. This specification describes an Elkay product with design, quality, and functional benefits to the user. When making a comparison of other producers' offerings, be certain these features are not overlooked.

adjustment other than for altitude requirements.

OPERATION OF QUICK CONNECT FITTINGS

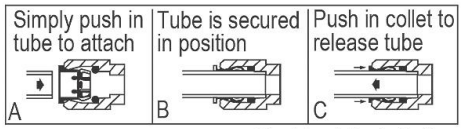

Pushing tube in before pulling it out helps to release tube

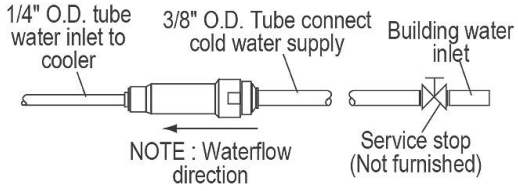

IMPORTANT!
INSTALLER PLEASE NOTE :

The grounding of electrical equipment such as telephone, computers, etc., to water lines is a common procedure. This grounding may be in the building or may occur away from the building. This grounding can cause electrical feedback into a water cooler, creating an electrolysis which causes a metallic taste or causes an increase in the metal content of the water. This condition is avoidable by using the proper materials as indicated below. To minimize electrically induced corrosion, all water coolers should be connected to the water supply using an electrically isolating coupling. This cooler is furnished with non-metallic filter which meets this requirement. The drain fittings which are provided by the installer should also be plastic to electrically isolate the cooler from the building plumbing system.
These products are designed to operate on 20 psi to 105 psi supply line pressure.

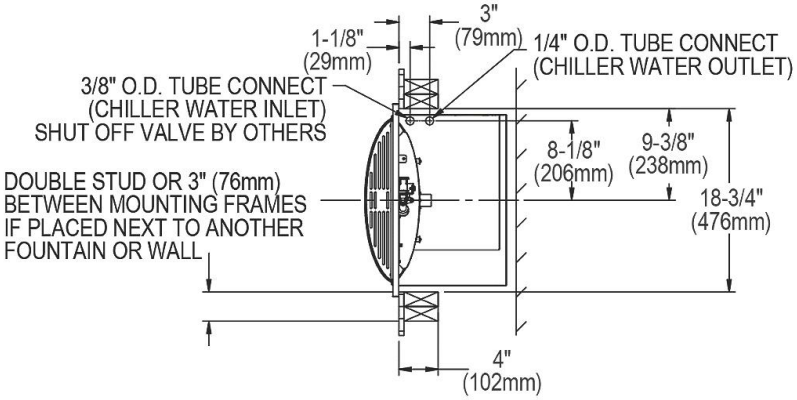

BOTTLE FILLER SPECIFICATIONS

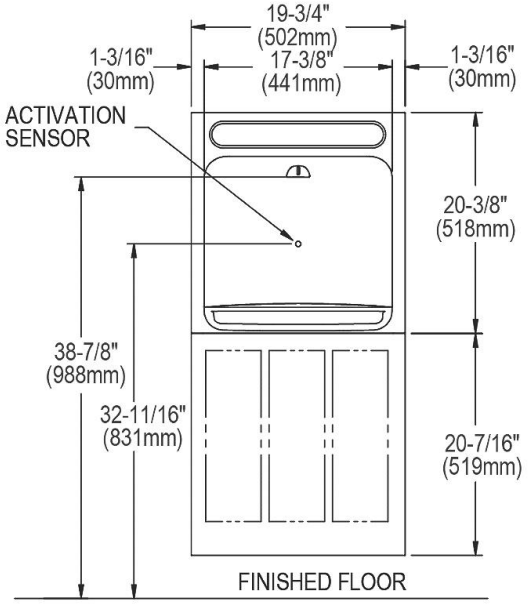

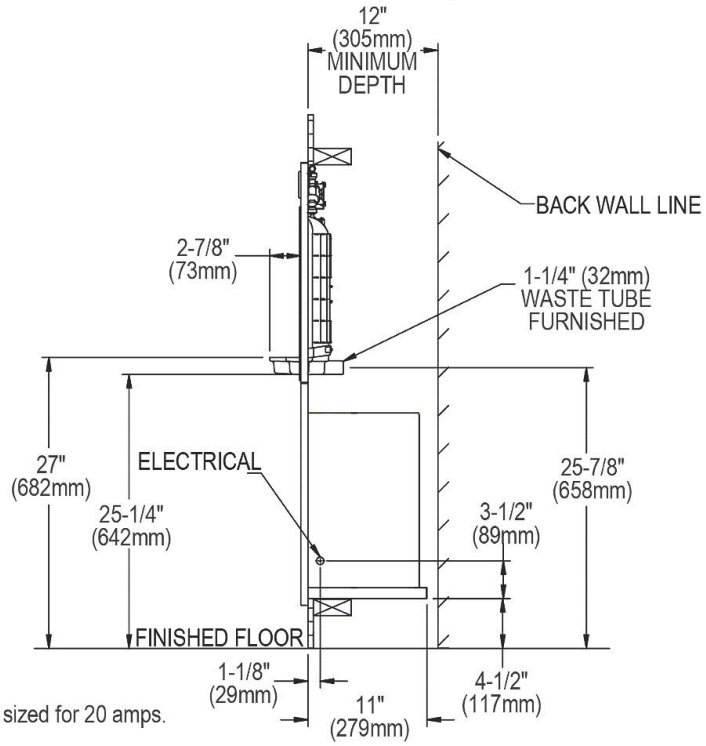

Note : New Installations Must Use Ground Fault Circuit Interrupter (GFCI).
It is highly recommended that the circuit be dedicated and the load protection be sized for 20 amps.

In keeping with our policy of continuing product improvement, Elkay reserves the right to change product specifications without notice. Please visit elkay.com for the most current version of Elkay product specification sheets. This specification describes an Elkay product with design, quality, and functional benefits to the user. When making a comparison of other producers' offerings, be certain these features are not overlooked.

MOUNTING FRAME MFWS100 WITH CHILLER SHELF

IMPORTANT!
INSTALLER PLEASE NOTE:

The grounding of electrical equipment such as telephone, computers, etc., to water lines is a common procedure. This grounding may be in the building or may occur away from the building. This grounding can cause electrical feedback into a water cooler, creating an electrolysis which causes a metallic taste or causes an increase in the metal content of the water. This condition is avoidable by using the proper materials as indicated below. The drain fittings which are provided by the installer should also be plastic to electrically isolate the cooler from the building plumbing system.

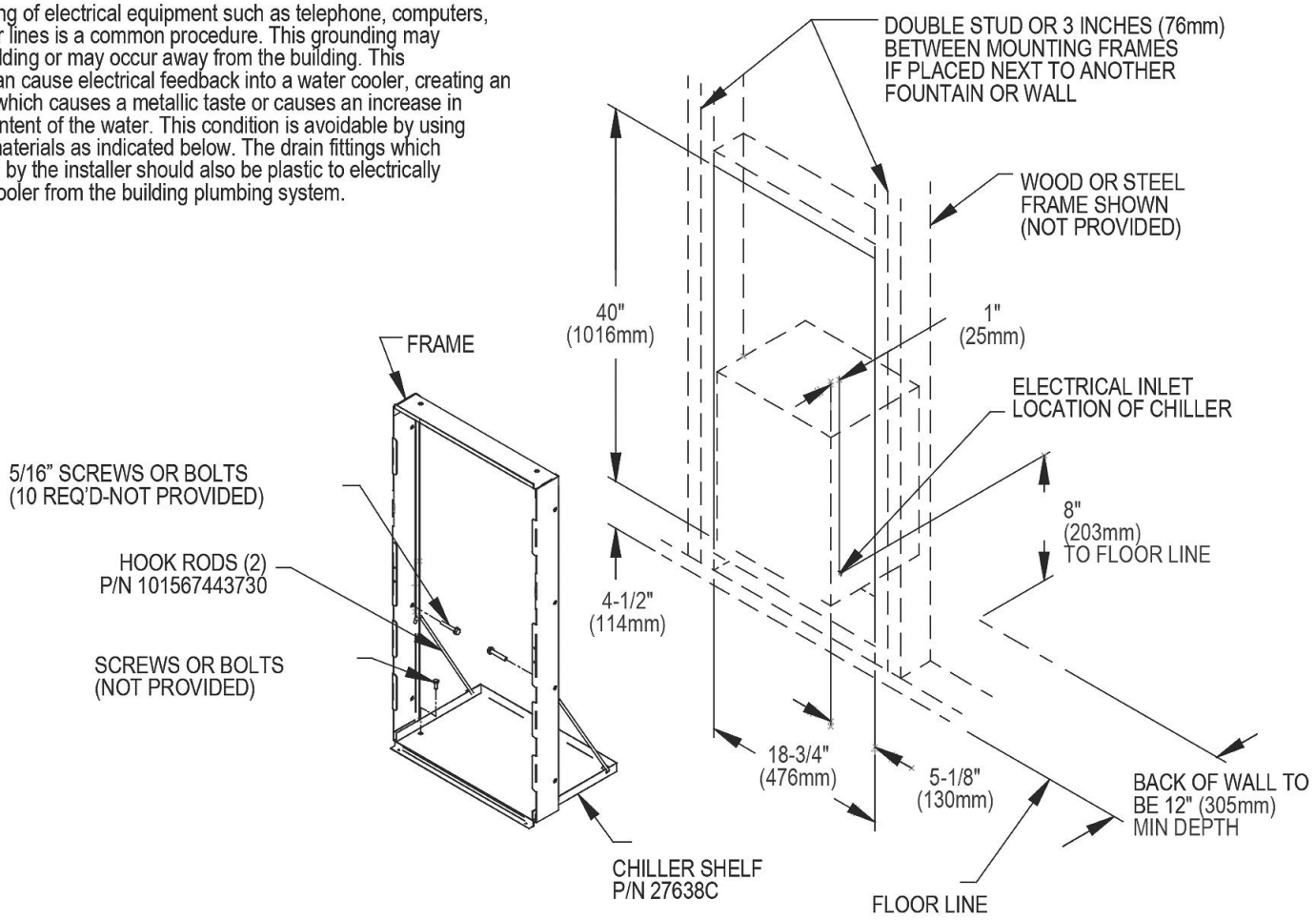

In keeping with our policy of continuing product improvement, Elkay reserves the right to change product specifications without notice. Please visit elkay.com for the most current version of Elkay product specification sheets. This specification describes an Elkay product with design, quality, and functional benefits to the user. When making a comparison of other producers' offerings, be certain these features are not overlooked.