ELKAY®
SPECIFICATIONS

Elkay Foodservice 3-8" Adjustable Centers Wall Mount Faucet w/8" Arc Tube Spout 4" Wristblade Handles 2in Inlet

Model(s) LK945AT08T4T

PRODUCT SPECIFICATIONS

Elkay Foodservice 3-8" Adjustable Centers Wall Mount Faucet w/8" Arc Tube Spout 4" Wristblade Handles 2in Inlet. Faucet has a flow rate of 1.5 GPM, and is made of Chrome Plated Brass material, with a Quarter Turn Ceramic Disc valve. Faucet requires 2 faucet holes.

Mounting Type:	Wall Mount
Special Features:	Low Flow Solid Brass Construction Spout swing restriction pin
Finish:	Chrome (CR)
Handle Type:	4" Wristblade Handle
Deck Clearance:	3-13/16"
Spout Reach:	8"
Spout Height:	6-3/8"
Hole Drillings:	2
Material:	Chrome Plated Brass
Valve Type:	Quarter Turn Ceramic Disc
Valve Connection:	Offset Adj 1/2" NPT Female Inl
Flow Rate:	1.5 GPM
Faucet Hole Spread:	3-3/8" to 8-1/2" Adjustable Spread
Spout Type:	Arc Tube

Special Note: 1.5 GPM VR aerator installed with 2.2 and .5 GPM inserts included



Chrome
(CR)



AMERICAN PRIDE. A LIFETIME TRADITION.
Like your family, the Elkay family has values and traditions that endure. For almost a century, Elkay has been a family-owned and operated company, providing thousands of jobs that support our families and communities.

Product Compliance: ADA & ICC A117.1
ASME A112.18.1/CSA B125.1
NSF 61
NSF 372 (lead free)

Complies with ADA & ICC A117.1 accessibility requirements when installed according to the requirements outlined in these standards.

Clean and Care Manual (PDF)
Installation Instructions (PDF)
Limited Warranty (PDF)

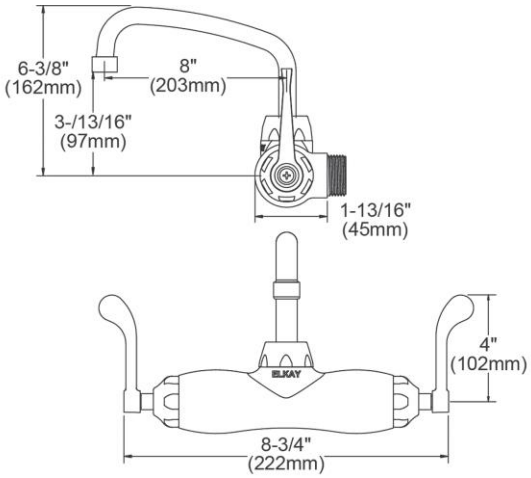

PART:_____QTY: _____

PROJECT:_____

CONTACT:_____

DATE:_____

NOTES:_____

APPROVAL:

In keeping with our policy of continuing product improvement, Elkay reserves the right to change product specifications without notice. Please visit elkay.com for the most current version of Elkay product specification sheets. This specification describes an Elkay product with design, quality, and functional benefits to the user. When making a comparison of other producers' offerings, be certain these features are not overlooked.

Elkay Foodservice 3-8" Adjustable Centers Wall Mount Faucet w/8" Arc Tube Spout 4" Wristblade Handles 2in Inlet

Model(s) LK945AT08T4T

ITEM	IND. PART	DESCRIPTION
1	A55393	Spout
2	45919C	Handle, 4"
3	45923C	Right Cold Cartridge
4	45924C	Left Hot Cartridge
5	A55413	2" Adjustable Inlet
6	45913C	Body
7	LK734	2.2 GPM VR Aerator

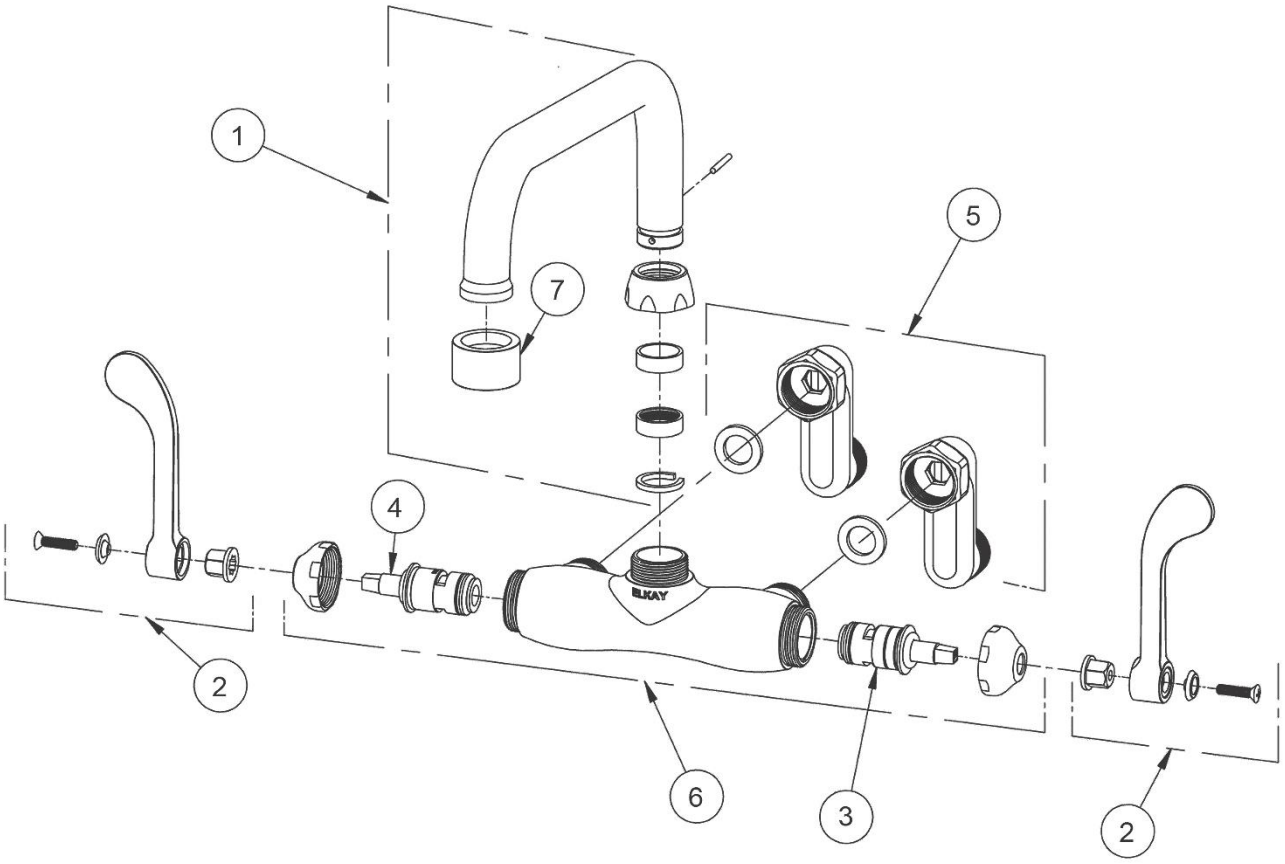

In keeping with our policy of continuing product improvement, Elkay reserves the right to change product specifications without notice. Please visit elkay.com for the most current version of Elkay product specification sheets. This specification describes an Elkay product with design, quality, and functional benefits to the user. When making a comparison of other producers' offerings, be certain these features are not overlooked.

© 2018