ELKAY®
SPECIFICATIONS

Elkay SwirlFlo Single Fountain Non-Filtered Non-Refrigerated Stainless
Model EDFPBV114C

PRODUCT SPECIFICATIONS

Elkay SwirlFlo® Single Fountain Non-Filtered Non-Refrigerated, Stainless. Furnished with Vandal-Resistant bubbler. Mechanical Front Bubbler Button activation. Product shall be Wall Mount (On-Wall), for Indoor applications, serving 1 station(s). Unit shall be lead-free design which is certified to NSF/ANSI 61 & 372 (lead free) and meets Federal and State low-lead requirements.

Finish:	Stainless Steel
Power:	No Electrical Required
Bubbler Style:	Vandal-Resistant
Activation by:	Mechanical Front Bubbler Button
Mounting Type:	Wall Mount (On-Wall)
Chilling Option:	Non-Refrigerated
Dimensions (L x W x H):	14" x 18-3/8" x 11-5/16"
Approx. Shipping Weight:	18 lbs.
Installation Location:	Indoor
No. of Stations Served:	1

Special Note: Requires In-Wall Carrier MPW101 (sold separately)

- Mechanically-Activated bubbler continues to supply water in event of service disruptions.
- Vandal-resistant, bubblers are one-piece, chrome plated with integral hood guard design to prevent contamination from other users, airborne deposits and tampering.



AMERICAN PRIDE. A LIFETIME TRADITION.
Like your family, the Elkay family has values and traditions that endure. For almost a century, Elkay has been a family-owned and operated company, providing thousands of jobs that support our families and communities.

Included with Product: Fountain

PRODUCT COMPLIANCE

ADA & ICC A117.1

Buy American Act

NSF/ANSI 61 & 372 (lead free)

Complies with ADA & ICC A117.1 accessibility requirements when installed according to the requirements outlined in these standards. Installation may require additional components and/or construction features to be fully compliant. Consult the local Authority Having Jurisdiction if necessary.

Installation Instructions (PDF)

Water Systems are warranted for 12 months from date of installation. **Warranty pertains to drinking water applications only. Non-drinking water applications are not covered under warranty.**

Warranty (PDF)

OPTIONAL ACCESSORIES

EWF172 - WaterSentry VII Filter Kit (Coolers + Fountains)
MPW101 - In Wall Carrier (Single)
AP99 - Accessory - Access Panel
97446C - Bubbler Kit Vandal-Resistant

PART:_____QTY: _____

PROJECT:_____

CONTACT:_____

DATE:_____

NOTES:_____

APPROVAL:_____

In keeping with our policy of continuing product improvement, Elkay reserves the right to change product specifications without notice. Please visit elkay.com for the most current version of Elkay product specification sheets. This specification describes an Elkay product with design, quality, and functional benefits to the user. When making a comparison of other producers' offerings, be certain these features are not overlooked.

Elkay SwirlFlo Single Fountain Non-Filtered Non-Refrigerated Stainless
Model EDFPBV114C

INSTALLER NOTE
This drinking fountain is furnished with a bubbler and valve including all connecting fittings which are manufactured of completely lead free material. Shut off valve (not furnished) to accept 3/8" O.D. unplated copper tube.

OPERATION OF QUICK CONNECT FITTINGS

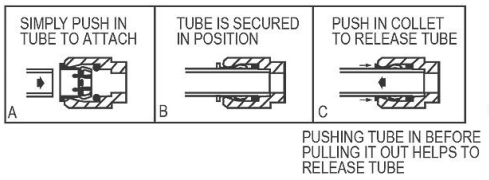

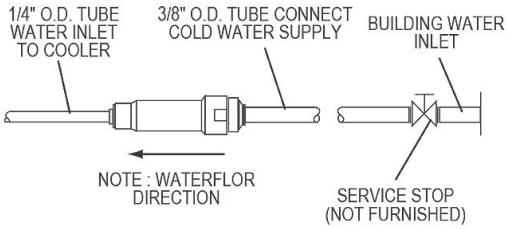

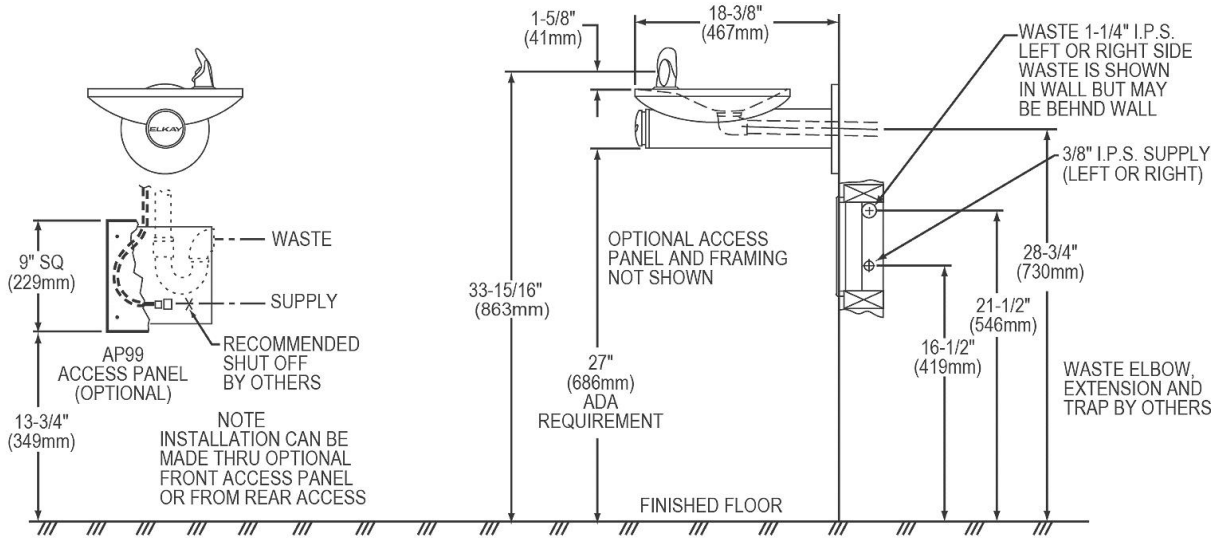

SUPPORT PREPARATION

NOTE
WALL PLATE MUST BE SUPPORTED SECURELY. ADD FIXTURE SUPPORT CARRIER IF WALL WILL NOT PROVIDE ADEQUATE SUPPORT.

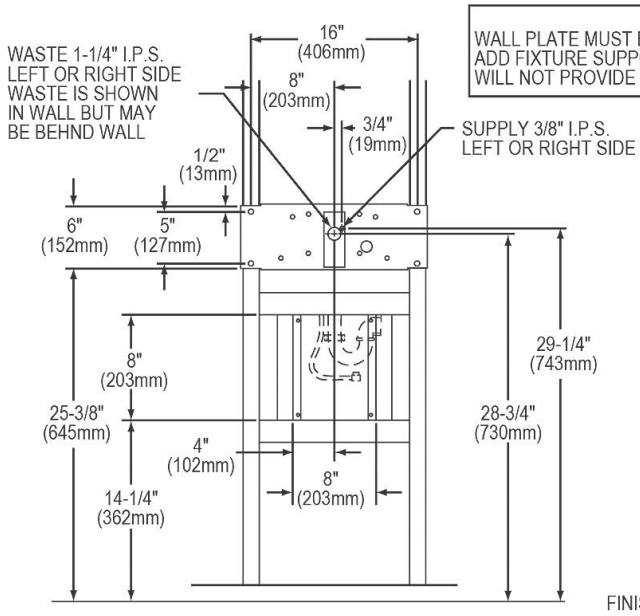

FRONT VIEW

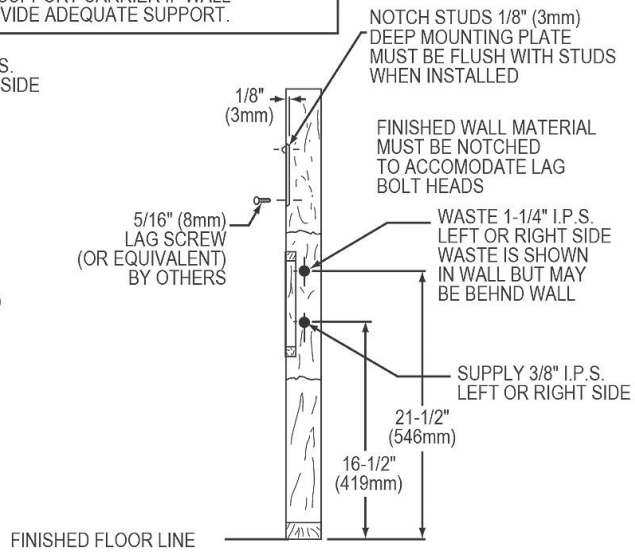

SIDE VIEW

In keeping with our policy of continuing product improvement, Elkay reserves the right to change product specifications without notice. Please visit elkay.com for the most current version of Elkay product specification sheets. This specification describes an Elkay product with design, quality, and functional benefits to the user. When making a comparison of other producers' offerings, be certain these features are not overlooked.