ELKAY®

INSTALLATION, CARE & USE MANUAL

VRC™ Series Barrier-Free Water Coolers



Note: Danger! Electrical shock hazard. Disconnect power before servicing unit.

Uses HFC-134A refrigerant

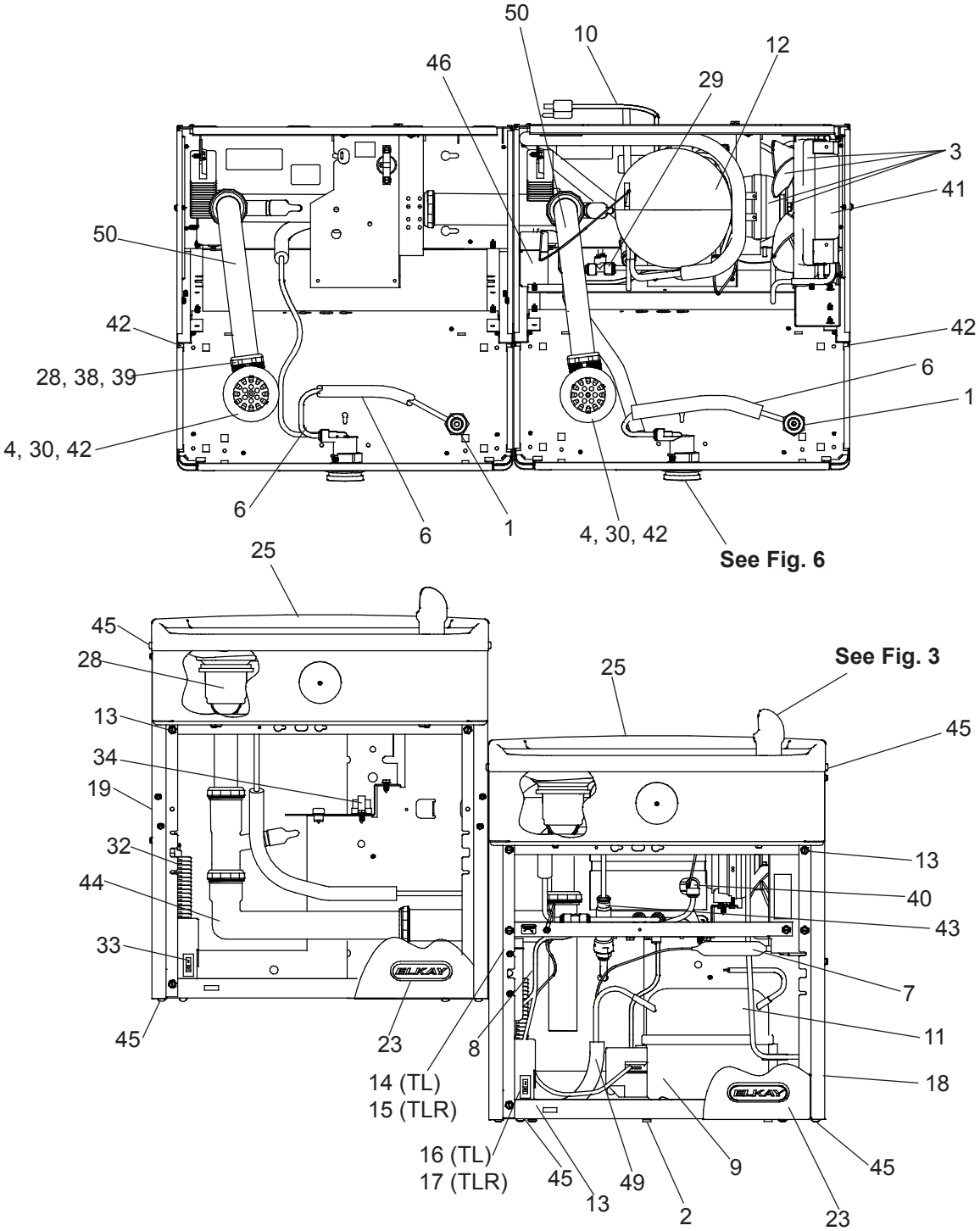

NOTE: Non-refrigerated units do not include all electrical and refrigeration components shown above. Other components and rough-in are the same as shown.

FIG. 1

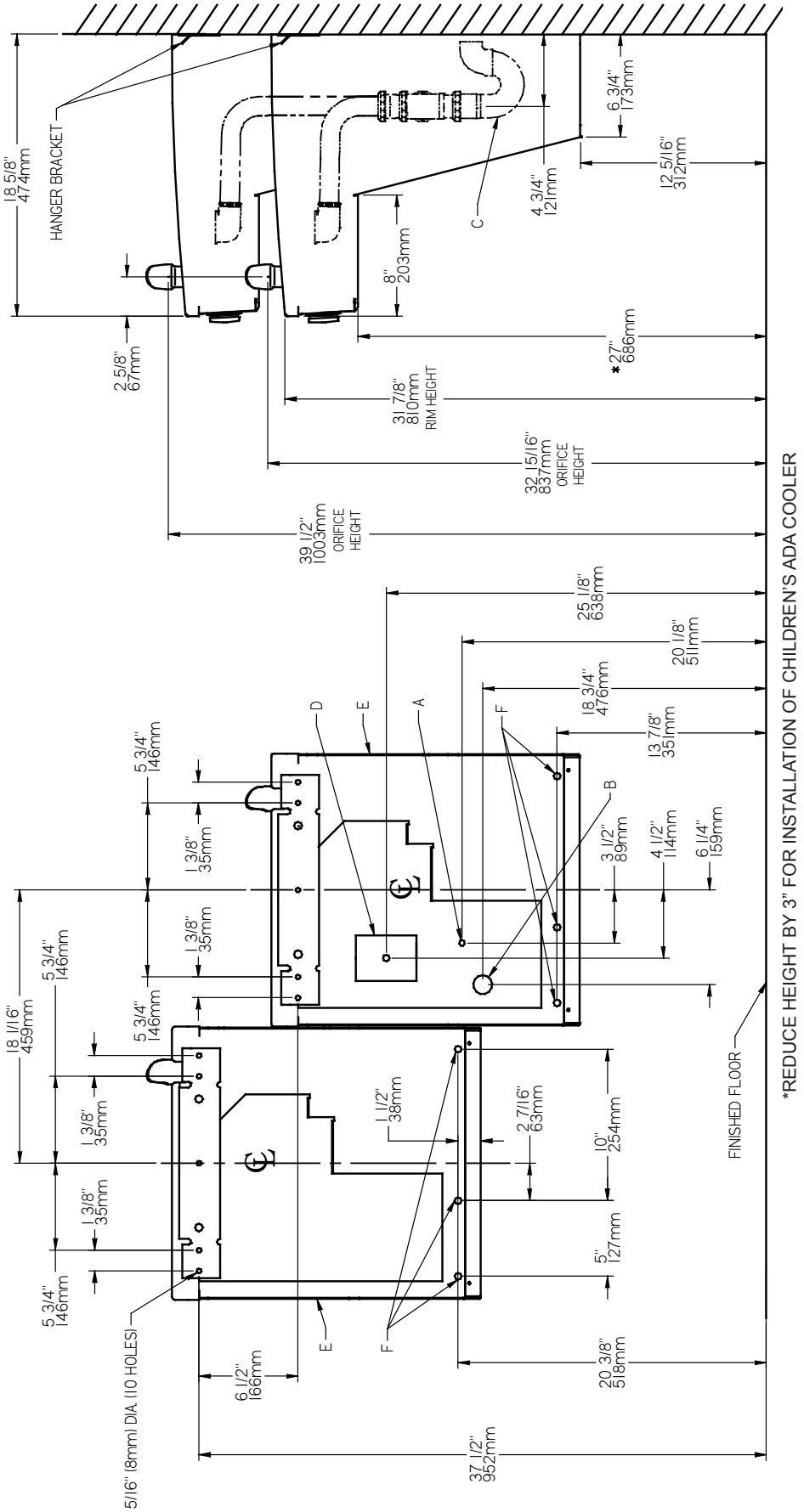

LEGEND/LEYENDA/LÉGENDE

A = RECOMMENDED WATER SUPPLY LOCATION 3/8 O.D. UNPLATED COPPER TUBE CONNECT STUB WITH SHUT OFF (BY OTHERS) 3 IN. (76mm) MAXIMUM OUT FROM WALL

B = RECOMMENDED LOCATION FOR WASTE OUTLET 1-1/2" O.D. DRAIN STUB 2 IN. OUT FROM WALL

C = 1-1/2 TRAP NOT FURNISHED

D = ELECTRICAL SUPPLY (3) WIRE RECESSED BOX

E = INSURE PROPER VENTILATION BY MAINTAINING 6" (152 mm) (MIN.) CLEARANCE FROM CABINET LOUVERS TO WALL.

F = 7/16 BOLT HOLES FOR FASTENING UNIT TO WALL

FIG. 2

IMPORTANT
ALL SERVICE TO BE PERFORMED BY AN AUTHORIZED SERVICE PERSON

HANGER BRACKETS & TRAP INSTALLATION

1) Remove hanger bracket fastened to back of cooler by removing one (1) screw.
2) Mount the hanger bracket and trap as shown in Figure 2.

NOTE: Hanger Bracket MUST be supported securely. Add fixture support carrier if wall will not provide adequate support.

IMPORTANT:
- 6 1/4 in. (159mm) dimension from wall to centerline of trap must be maintained for proper fit.
- Anchor hanger securely to wall using all five (5) 1/4 in. dia. mounting holes.

3) Install straight valve for 3/8" O.D. tube.

INSTALLATION OF COOLER

4) Hang the cooler on the hanger bracket. Be certain the hanger bracket is engaged properly in the slots on the cooler back as shown in Figure 2.
5) Loosen the two (2) screws holding the lower front panel at the bottom of cooler base and two (2) screws at the top **(Use torx bits sold separately)**. Remove the front panel and set aside.
6) Connect water inlet line--See Note 4 of General Instructions.
7) Remove the slip nut and gasket from the trap and install them on the cooler waste line making sure that the end of the waste line fits into the trap. Assemble the slip nut and gasket to the trap and tighten securely.

START UP
Also See General Instructions

8) Stream height is factory set at 45-50 PSI. If supply pressure varies greatly from this, adjust screw using the access hole in the pushbutton (insert screwdriver). CW adjustment will raise stream and CCW adjustment will lower stream. For best adjustment, stream should hit basin approximately 6-1/2" (165mm) from bubbler.

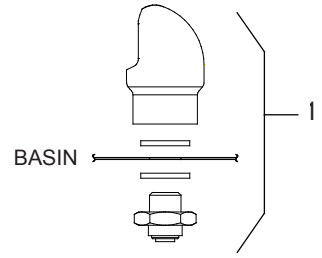

Vandal-Resistant Bubbler
Fig. 3

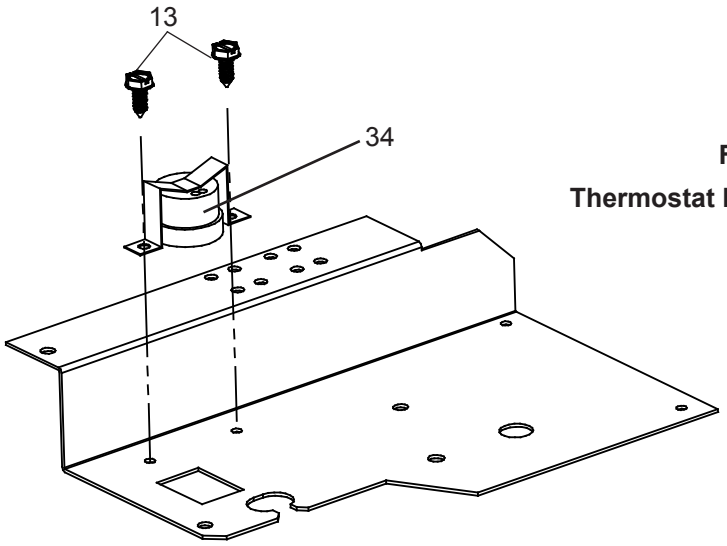

Fig.4
Thermostat Installation Detail

Fig. 5
Heater Strip Detail

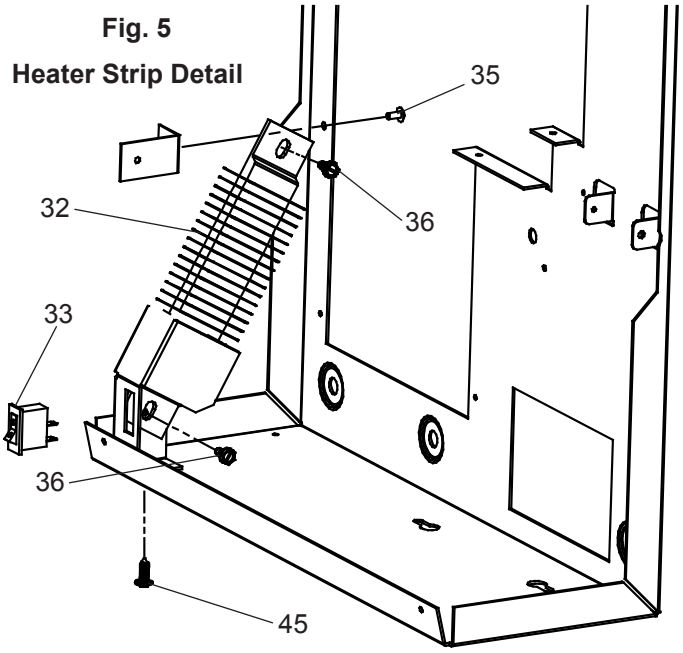

WARNING!

This unit is frost resistant down to 0˚F with no wind. Prevailing winds can reduce the ability of the heater element to prevent light freezing. If the ambient air temperature will drop below 0˚F, the cooler needs to be drained of all water by blowing out all water lines, evaporator (item 12), and the drain trap. A heater strip is used to heat the unit and will begin to cycle at 40˚F +/- 5˚F. A check at this temperature will ensure the heater is working and the unit is resistant to light freezing.

ALSO, MAKE SURE THERE ARE NO PLASTIC OR FLAMMABLE COMPONENTS DIRECTLY ABOVE THE HEATER STRIP.

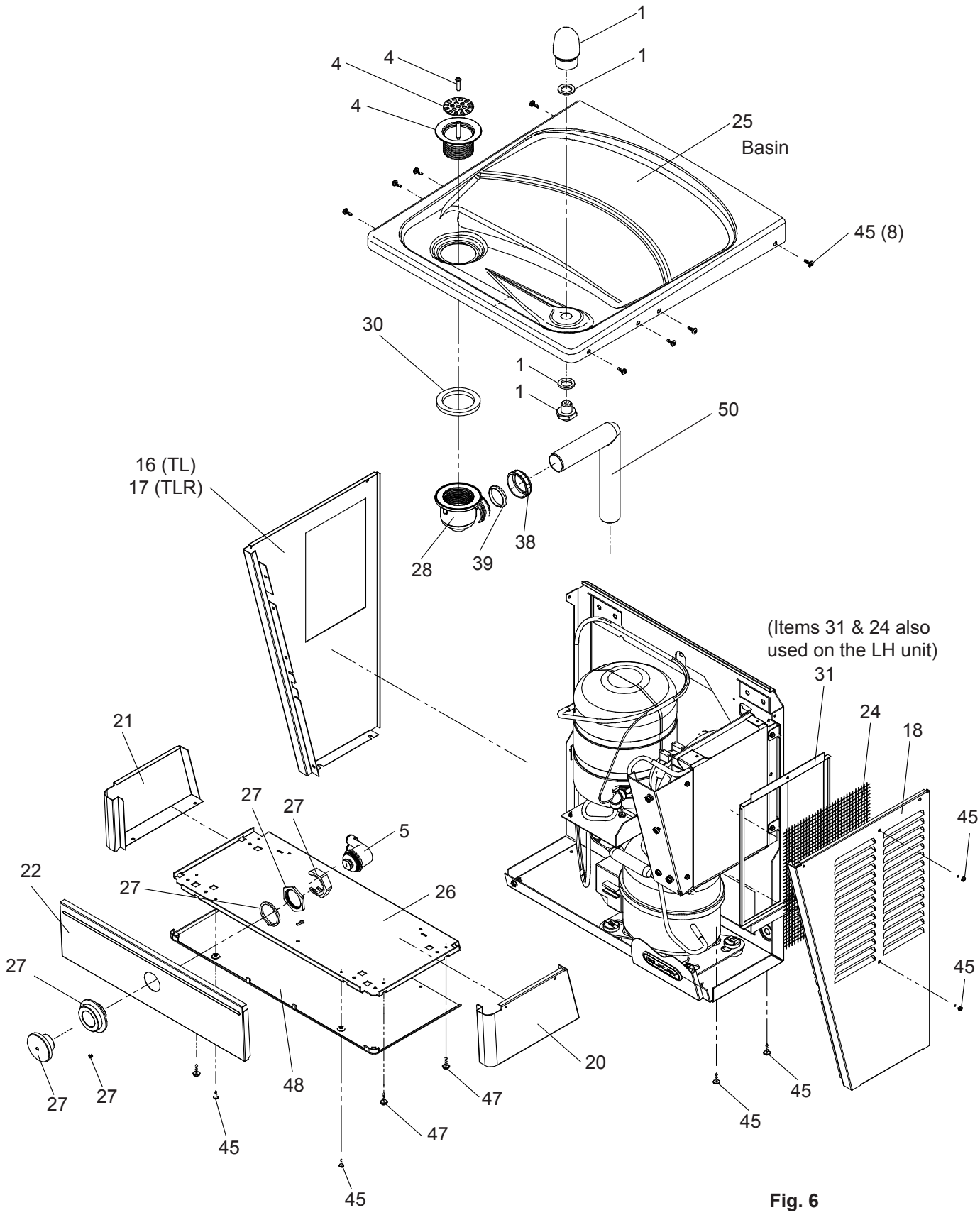

Fig. 6
(Refrigerated side shown)

115V PARTS LIST

ITEM NO.	PART NO.	DESCRIPTION
1	97446C	VR Bubbler Assy.
2	98777C	Kit - Compr Mtg Hardware/Grommets/Studs/Clips
3	98775C	Kit - Fan Mtr/Blade/Shroud/Nut/Screws
4	600985551640	Kit - Drain Plug/Strainer/Adapter/Screw
5	98530C	Kit - Regulator/Holder/Nut
6	56092C	Tubing - Poly (Cut To length)
7	66703C	Drier
8	98773C	KIt - Cold Control/Screws
9	0000000238	Kit - Relay/Overload/Cover
10	35900C	Power Cord (RH Unit Refrig.)
*11	36322C	Compressor Serv. Pak EMI 70
12	98724C	Kit - Evaporator Replacement Assembly
13	1000001325	Kit - Screw - #10 x 1/2" Lg. HHSM (3 Pack)
14	See Color Table	Panel - RH Rear TL
15	See Color Table	Panel - RH Rear TLR
16	See Color Table	Panel - LH Rear TL
17	See Color Table	Panel - LH Rear TLR
18	See Color Table	Panel - RH Rear
19	See Color Table	Panel - LH Rear
20	See Color Table	Panel - RH Dispenser Side
21	See Color Table	Panel - LH Dispenser Side
22	See Color Table	Panel - Dispenser Front
23	See Color Table	Panel - Front Lower
24	28617C	Screen - VR
25	0000000966	Kit - Basin - Stainless Steel
26	22897C	Panel - Bottom Dispenser
27	1000001906	Kit - Push Button/Sleeve/Spacer/Nuts/Screw
28	56121C	Elbow - Drain
29	1000001994	Kit - Tee 1/4" (3 Pack)
30	100147140560	Gasket - Drain
31	28596C	Panel - Screen
32	35906C	Heater Strip
33	35907C	Switch - Rocker
34	35909C	FR Thermostat Assy.
35	70432C	Screw - 8-32 x .38 THTC
36	75506C	Screw - #10 x .75 HHSM
37	35902C	Wire - Black #18AWG
38	75588C	Nut - Slip Joint 1-1/4"
39	75589C	Gasket
40	1000001602	Kit - Elbow 5/16" (3 Pack)
41	98776C	Kit - Condenser/Drier
42	75524C	Clip (Front & Rear Panels)
43	55996C	Strainer (See "General Instructions")
44	1000002055	Kit - Drain Tube Assy.
45	0000001190	Kit - #10 Pinned Torx Screws/T-25 Bit
46	27124C	Cover - Cold Control
47	70864C	Screw - #8 x .62 Torx/Slot
48	55931C	Cover - Dispenser Bottom
49	98778C	Kit - Heat Exchanger/Drier
50	45929C	Tube - Drain
Sold Separate	75520C	Torx Tool - T25
NS	28551C	Hanger Bracket
NS	36012C	Power Cord (LH/RH Units Less Refrig.)

NS = NOT SHOWN

***REPLACE WITH SAME COMPRESSOR USED IN ORIGINAL ASSEMBLY.**

NOTE: All correspondence pertaining to any of the above water coolers or orders for repair parts MUST include Model No. and Serial No. of cooler, name and part number of replacement part.

WARNING!

This unit is frost resistant down to 0˚F with no wind. Prevailing winds can reduce the ability of the heater element to prevent light freezing. If the ambient air temperature will drop below 0˚F, the cooler needs to be drained of all water by blowing out all water lines and drain trap. A heater strip is used to heat the unit and will begin to cycle at 40˚F +/- 5˚F. A check at this temperature will ensure the heater is working and the unit is resistant to light freezing.

ALSO, MAKE SURE THERE ARE NO PLASTIC OR FLAMMABLE COMPONENTS DIRECTLY ABOVE THE HEATER STRIP.

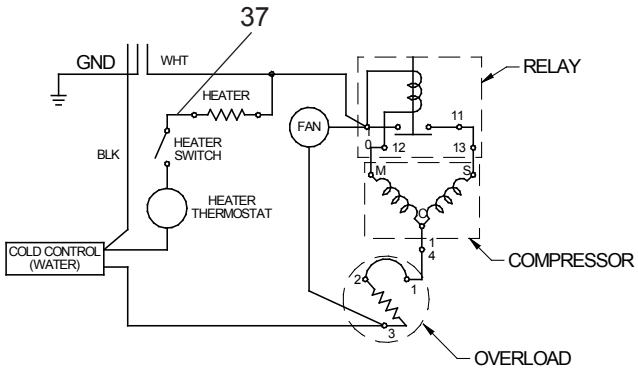

Wiring Diagram

Refrig. Unit	COLOR TABLE / PANEL COLOR	Item No. 18 Part No.	Item No. 20 Part No.	Item No. 21 Part No.	Item No. 22 Part No.	Item No. 23 Part No.	Item No. 16 Part No.	Item No. 17 Part No.
	Stainless Steel	28525C	28519C	28522C	28516C	22955C	28536C	28562C

Left Unit	COLOR TABLE / PANEL COLOR	Item No. 19 Part No.	Item No. 20 Part No.	Item No. 21 Part No.	Item No. 22 Part No.	Item No. 23 Part No.	Item No. 14 Part No.	Item No. 15 Part No.
	Stainless Steel	28528C	28519C	28522C	28516C	22955C	28539C	28559C

PRINTED IN U.S.A.

REPAIR SERVICE INFORMATION TOLL FREE NUMBER 1.800.260.6640
FOR PARTS, CONTACT YOUR LOCAL DISTRIBUTOR OR CALL 1.800.834.4816
ELKAY MANUFACTURING COMPANY • 2222 CAMDEN COURT • OAK BROOK, IL 60523 • 630.574.8484 • www.elkay.com