ELKAY®
SPECIFICATIONS

# Elkay Outdoor Fountain Tri-Level Pedestal Non-Filtered Non-Refrigerated
# Model LK4430

## PRODUCT SPECIFICATIONS

Elkay Outdoor Fountain Tri-Level Pedestal Non-Filtered, Non-Refrigerated. Features shall include 316 Stainless, Heavy Duty Vandal-Resistant. Furnished with Vandal-Resistant bubbler. Mechanical Front Bubbler Button activation. Product shall be Floor Mount/Freestanding, for Outdoor applications, serving 3 station(s). Unit shall be lead-free design which is certified to NSF/ANSI 61 & 372 (lead free) and meets Federal and State low-lead requirements.

| | |
|---|---|
| **Special Features:** | 316 Stainless, Heavy Duty Vandal-Resistant |
| **Finish:** | Beige (BGE), Black (BLK), Blue (BLU), Brown (BRN), Evergreen (EVG), Gray (GRY), Orange (ORN), Purple (PUR), Red (RED), Terracotta (TER), White (WHT), Yellow (YLW) |
| **Power:** | No Electrical Required |
| **Bubbler Style:** | Vandal-Resistant |
| **Activation by:** | Mechanical Front Bubbler Button |
| **Mounting Type:** | Floor Mount/Freestanding |
| **Chilling Option:** | Non-Refrigerated |
| **Dimensions (L x W x H):** | 14" x 48" x 40-5/16" |
| **Approx. Shipping Weight:** | 248 lbs. |
| **Installation Location:** | Outdoor |
| **No. of Stations Served:** | 3 |

- Mechanically-Activated bubbler continues to supply water in event of service disruptions.
- Base material constructed from marine-grade 316 stainless steel provides the ultimate corrosion protection from even the most corrosive elements.
- Heavy Duty Vandal-Resistant:
  - Tamper resistant screws
  - Resists stains and corrosion
  - Heavy-gauge construction
- Vandal-resistant, bubblers are one-piece, chrome plated with integral hood guard design to prevent contamination from other users, airborne deposits and tampering.






AMERICAN PRIDE. A LIFETIME TRADITION.
Like your family, the Elkay family has values and traditions that endure. For almost a century, Elkay has been a family-owned and operated company, providing thousands of jobs that support our families and communities.

MADE IN USA

**Included with Product:** Outdoor Fountain

## PRODUCT COMPLIANCE

ADA & ICC A117.1

Buy American Act

NSF/ANSI 61 & 372 (lead free)

Complies with ADA & ICC A117.1 accessibility requirements when installed according to the requirements outlined in these standards. Installation may require additional components and/or construction features to be fully compliant. Consult the local Authority Having Jurisdiction if necessary.

Installation Instructions (PDF)

**Warranty pertains to drinking water applications only. Non-drinking water applications are not covered under warranty.**

Warranty (PDF)

## OPTIONAL ACCESSORIES

| |
|---|
| LK4471LHB - Locking Hose Bib |
| 97890C - Accessory - Direct Bury Adaptor |

PART:_____QTY: _____

PROJECT:_____

CONTACT:_____

DATE:_____

NOTES:_____

APPROVAL:_____

*In keeping with our policy of continuing product improvement, Elkay reserves the right to change product specifications without notice. Please visit elkay.com for the most current version of Elkay product specification sheets. This specification describes an Elkay product with design, quality, and functional benefits to the user. When making a comparison of other producers' offerings, be certain these features are not overlooked.*


© 2018

# Elkay Outdoor Fountain Tri-Level Pedestal Non-Filtered Non-Refrigerated
# Model LK4430

**OPERATING PRESSURES:**
Supply water 20 – 105 psi maximum

**MOUNTING INSTRUCTIONS and PLUMBING CONNECTIONS**
Provide solid, well-drained surface to mount pedestal fountain (concrete pad recommended) with adequate support (300lb. load minimum). (6) 3/8 minimum fasteners (not included) should be attached firmly to mounting surfaces in order to secure unit. (Refer to rough-in diagram)

Locate and install plumbing through ground as required.
**NOTE:** Unit is not furnished with service valve.

Position pedestal over plumbing and secure base to fasteners. Remove access panels and connect supply and water lines. Turn on water supply and check for leaks. Reassemble access panels to pedestal.

**Trap and service not included.**

## TOP VIEW

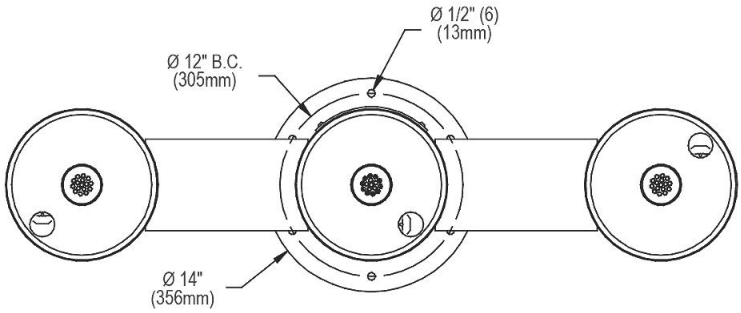


## BACK VIEW

## SIDE & FRONT VIEWS

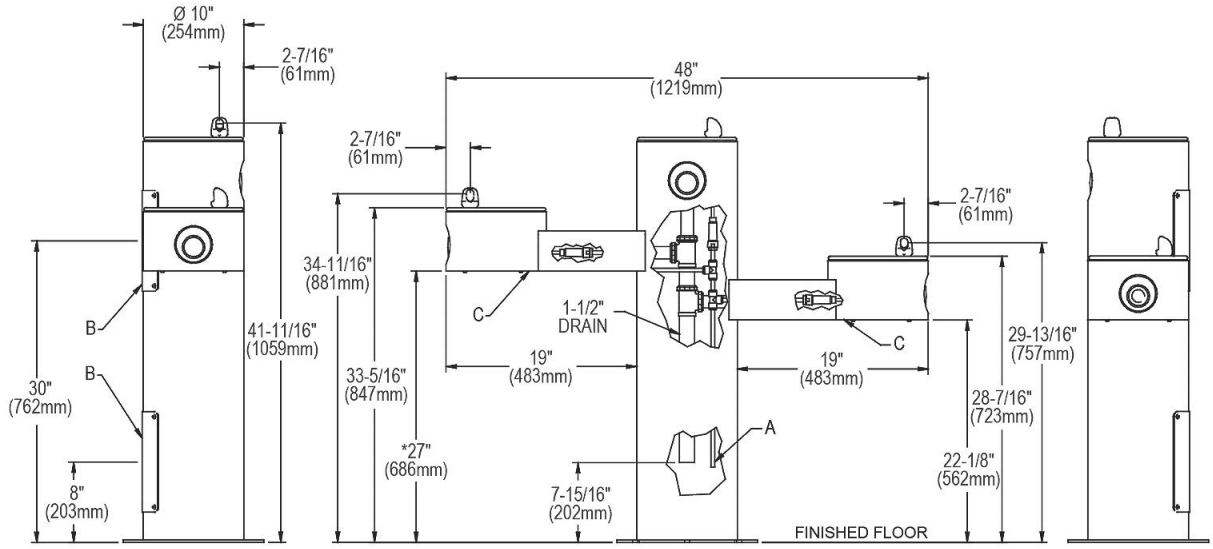


A = 3/8" O.D. Unplated copper tube connect shut off valve by others
B = Access Panel (8" X 10")
C = Removable bottom cover

* ADA Requirement

*In keeping with our policy of continuing product improvement, Elkay reserves the right to change product specifications without notice. Please visit elkay.com for the most current version of Elkay product specification sheets. This specification describes an Elkay product with design, quality, and functional benefits to the user. When making a comparison of other producers' offerings, be certain these features are not overlooked.*